序
Index

Metallized Polypropylene Film Capacitors	MPP	----------	1~ 2
Metallized Polypropylene Film Capacitors	MMP	----------	3~ 5
Metallized Polyester Film Capacitors	MPE	----------	6~ 8
Metallized Polyester Film Capacitors	MEM	----------	9~13
Axial Metallized Polypropylene Film Capacitors	MPT	----------	14~16
X1 Type Safety Film Capacitor 275VAC~480VAC	X1	----------	17~19
X2 Type Safety Film Capacitor 275VAC~480VAC	X2	----------	20~22
Y1 Type Safety Film Capacitor 250VAC~500VAC	Y1	----------	23~24
Y2 Type Safety Film Capacitor 250VAC~500VAC	Y2	----------	25~27
X1/X2 Safety Film Capacitor 1500VDC ,760VAC	X1/X2DC	----------	28~29
Y2(X1) Safety Film Capacitor 1500VDC	Y2 DC	----------	30~31
Metallized Polypropylene Film Capacitors	PMM	----------	31~34
Polypropylene Film/Foil Capacitors	PPS	----------	35~38
Double sided metallized polypropylene Film Capacitor	PMD	----------	39~44
Metallized Polypropylene Film Capacitors	IGBT	----------	45~47
Metallized Polypropylene Film Capacitors	DC-Link	----------	48~52
AC Filter Multiple Filter Capacitor	X+Y	----------	53~54
Spark Quencher Capacitor	RC	----------	55
AC Filter Metallized Polypropylene Film Capacitor	HMP	----------	56~62
Three-phase AC Filter Capacitor	HMP-3P	----------	63~64
Ceramic Y1 Type Safety Capacitor	Y1	----------	65~66
Ceramic Y2 Type Safety Capacitor	Y2	----------	67~68
High Voltage Ceramic Capacitor DC	HVCC	----------	69
SMD Polymer Aluminum Capacitors	Polymer	----------	70~73
Metal Oxide Varistor	MOV	----------	74~78
C Coin Type Supercapacitors	Super	----------	79~81
H Coin Type Supercapacitors	Super	----------	82~84

特點 Feature :

- 能承受較高的溫度

  Can withstand higher temperatures

- 尺寸及腳距齊全

  Dimensions and Pitch are complete

應用 Application :

- 標準用法

  General purpose usage

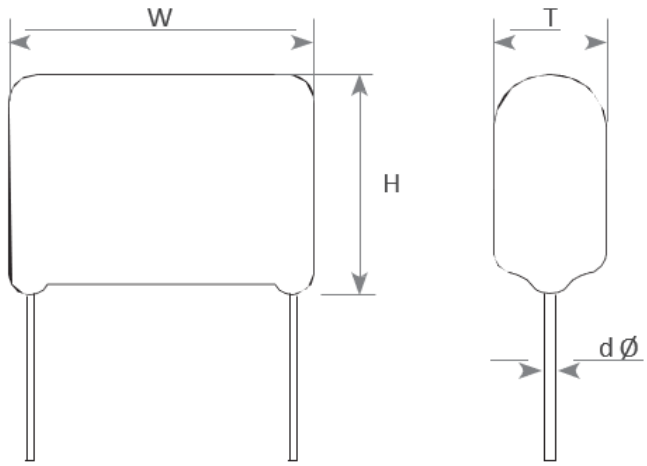

電氣特性 ELECTRICAL CHARACTERISTICS :

額定電壓 Rated Voltage	100, 250, 400, 630 VDC
最大運行溫度 Maximum Operating Temperature	-40℃ to +110℃. (於+85℃ to +110℃間，溫度每上升一度℃，耐電壓會下降 1.25%) -40℃ to +110℃(+85℃ to +110℃ : Decreasing factor 1.25% per ℃ for Ur)
容量範圍 Capacitance Range	0.01μF ~ 10 μF
容量誤差 Capacitance Tolerance	± 5% (J), ± 10% (K)
絕緣電阻 Insulation Resistance	C<0.33μF 30,000MΩ min., C>0.33μF 10,000MΩ/mF min.
耐壓 Withstand Voltage	[Between Terminal] Nothing abnormal shall be found, 1.50x rated voltage for 60 seconds max. [Between Terminals & Enclosure] Nothing abnormal shall be found, 1.75x rated voltage for 5 seconds max.
損耗角 Dissipation Factor	<=0.001(1%) at 1 KHz

R.V.	100VDC				
Cap (μf)	W ±1.0	H ±1.0	T ±1.0	P	Dø ±0.05
0.01	10.5	9.0	6.0	7.5	0.6
0.02	10.5	9.0	6.0	7.5	0.6
0.02	13.0	10.0	6.0	10.0	0.6
0.03	13.0	10.0	6.5	10.0	0.6
0.05	13.0	10.0	6.5	10.0	0.6
0.07	13.0	10.5	6.0	10.0	0.6
0.10	13.0	11.0	7.0	10.0	0.6
0.15	18.5	12.0	7.0	15.0	0.8
0.22	18.5	12.5	7.5	15.0	0.8
0.33	18.5	14.5	8.5	15.0	0.8
0.47	18.5	15.5	10.0	15.0	0.8
0.68	26.0	15.0	8.5	22.5	0.8
1.0	26.0	19.5	7.5	22.5	0.8
1.5	26.0	19.5	11.5	22.5	0.8
2.2	32.0	22.0	12.5	27.5	0.8
3.3	32.0	26.0	16.5	27.5	0.8
4.7	32.0	28.0	18.0	27.5	0.8
6.8	37.0	30.0	20.0	32.5	0.8
10.0	37.0	35.0	24.5	32.5	0.8

R.V.	250VDC				
Cap (μf)	W ±1.0	H ±1.0	T ±1.0	P	Dø ±0.05
0.010	13.0	10.0	6.0	10.0	0.6
0.015	13.0	10.0	6.0	10.0	0.6
0.022	13.0	10.0	6.0	10.0	0.6
0.033	13.0	10.0	6.5	10.0	0.6
0.047	13.0	10.0	6.5	10.0	0.6
0.07	13.0	10.5	6.5	10.0	0.6
0.10	13.0	11.0	7.0	10.0	0.6
0.15	18.5	12.0	7.0	15.0	0.8
0.22	18.5	12.5	7.5	15.0	0.8
0.33	18.5	14.5	8.5	15.0	0.8
0.47	18.5	15.5	10.0	15.0	0.8
0.68	26.0	15.0	8.5	22.5	0.8
1.00	26.0	19.5	7.5	22.5	0.8
1.50	26.0	19.5	11.5	22.5	0.8
2.20	32.0	22.0	12.5	27.5	0.8
3.30	32.0	26.0	16.5	27.5	0.8
4.70	32.0	28.0	18.0	27.5	0.8
6.8	37.0	30.0	20.0	32.5	0.8
10.0	37.0	35.0	24.5	32.5	0.8

R.V.	400VDC				
Cap (μf)	W ±1.0	H ±1.0	T ±1.0	P	Dø ±0.05
0.01	10.5	8.0	4.5	7.5	0.6
0.015	10.5	8.5	5.0	7.5	0.6
0.022	10.5	8.5	5.0	7.5	0.6
0.033	10.5	9.0	5.5	7.5	0.6
0.047	10.5	9.5	6.0	7.5	0.6
0.068	13.0	8.5	4.5	10.0	0.6
0.1	13.0	9.0	5.0	10.0	0.6
0.15	13.0	9.5	5.5	10.0	0.6
0.22	13.0	11.0	5.5	10.0	0.6
0.33	13.0	11.5	5.5	10.0	0.6
0.47	13.0	12.0	6.5	10.0	0.6
0.68	18.5	10.5	5.0	15.0	0.8
1.0	18.5	11.5	5.5	15.0	0.8
1.5	18.5	12.0	6.0	15.0	0.8
2.2	18.5	13.5	6.0	15.0	0.8

R.V.	630VDC				
Cap (μf)	W ±1.0	H ±1.0	T ±1.0	P	Dø ±0.05
0.01	13.0	11.0	6.5	10.0	0.6
0.015	13.0	11.5	7.0	10.0	0.6
0.022	13.0	12.5	8.0	10.0	0.6
0.033	18.5	13.0	8.0	15.0	0.8
0.047	18.5	14.0	8.5	15.0	0.8
0.068	18.5	15.0	9.5	15.0	0.8
0.1	26.0	14.5	8.0	22.5	0.8
0.15	26.0	15.5	9.5	22.5	0.8
0.22	32.0	19.0	12.0	27.5	0.8
0.33	32.0	22.0	14.5	27.5	0.8
0.47	32.0	24.5	15.5	27.5	0.8
0.680	32.0	29.0	16.5	27.5	0.8
1.0	32.0	31.0	18.0	27.5	0.8

特點 Feature :

- 高自愈性

  Self-healing property

- 低噪音

  Low Noise

- 小型化

  Ultra-miniature size

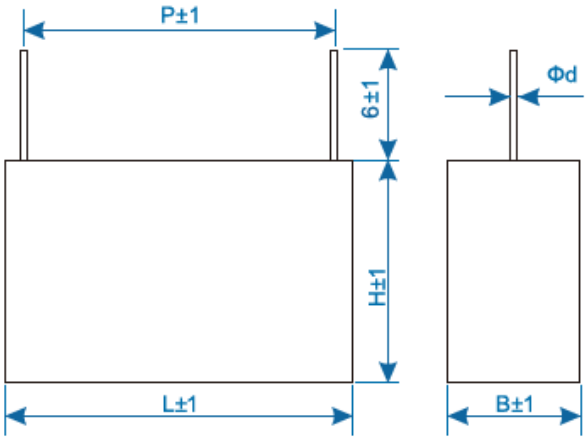

應用 Application :

- 使用於各式 PFC 功率因素校正

  Use for all kinds of PFC power calibration

電氣特性 ELECTRICAL CHARACTERISTICS :

引用標準 Related Documents	IEC 60384-16
額定電壓 Rated Voltage	450, 520, 630 VDC
額定溫度 Rated Temperature	– 40°C ~ + 110°C
最大運行溫度 Maximum Operating Temperature	110°C (Derating ratio of rated voltage to +85°C~+110°C: 1.25% per °C for Rated Voltage) 125°C (Derating ratio of rated voltage to +85°C~+125°C: 1.5% per °C for Rated Voltage)
容量範圍 Capacitance Range	0.068 μF ~ 2.2 μF
容量誤差 Capacitance Tolerance	± 5% (J), ± 10% (K)
絕緣電阻 Insulation Resistance	Terminal to Terminal: (at 20°C ±5°C), Voltage charge time: 1 minute. Voltage : 100VDC. ≥15,000 MΩ(C≤0.33uf), ≥5,000 Mohm*uF/C (C>0.33uf)
耐壓 Withstand Voltage	Terminal to Terminal: (at 20°C±5°C) Apply 1.5 times of Ur for 60 +/-5sec. or 1.75 times of Ur for 2 sec.
損耗角 Dissipation Factor	<=0.001(0.1%) at 1 KHz

➢ 最大溫度 110°C 尺寸表

R.V.	450VDC / 160 VAC				
Cap (μf)	W ±1.0	H ±1.0	T ±1.0	P	Dø ±0.05
0.1	13.0	9.0	4.0	10.0	0.6
0.15	13.0	9.0	4.0	10.0	0.6
0.22	13.0	10.0	5.0	10.0	0.6
0.33	13.0	11.0	5.5	10.0	0.6
0.47	13.0	13.0	6.0	10.0	0.6
0.68	13.0	14.0	8.0	10.0	0.6
1.0	13.0	17.0	8.0	10.0	0.6
0.47	18.0	11.0	5.0	15.0	0.8
0.68	18.0	12.0	6.0	15.0	0.8
1.0	18.0	13.0	7.0	15.0	0.8
1.5	18.0	17.0	8.0	15.0	0.8
2.0	18.0	18.0	9.0	15.0	0.8
2.2	18.0	18.0	10.0	15.0	0.8
1.0	26.0	15.0	6.0	22.5	0.8
1.5	26.0	16.5	7.0	22.5	0.8
2.2	26.0	18.0	9.0	22.5	0.8

R.V.	520 VDC / 200 VAC				
Cap (μf)	W ±1.0	H ±1.0	T ±1.0	P	Dø ±0.05
0.1	13.0	9.0	4.0	10.0	0.6
0.15	13.0	10.0	5.0	10.0	0.6
0.22	13.0	11.0	5.5	10.0	0.6
0.33	13.0	12.0	6.0	10.0	0.6
0.47	13.0	13.0	7.0	10.0	0.6
0.68	13.0	15.5	8.0	10.0	0.6
0.22	18.0	11.0	5.0	15.0	0.8
0.33	18.0	11.0	5.0	15.0	0.8
0.47	18.0	12.0	6.0	15.0	0.8
0.68	18.0	13.0	7.0	15.0	0.8
1.0	18.0	15.5	8.0	15.0	0.8
1.5	18.0	18.0	9.0	15.0	0.8
2.2	18.0	19.0	12.5	15.0	0.8
0.68	26.0	15.0	6.0	22.5	0.8
1.0	26.0	16.5	7.0	22.5	0.8
1.5	26.0	18.0	9.0	22.5	0.8
2.2	26.0	20.0	11.0	22.5	0.8

R.V.	630 VDC / 200 VAC				
Cap (μf)	W ±1.0	H ±1.0	T ±1.0	P	Dø ±0.05
0.068	13.0	9.0	4.0	10.0	0.6
0.1	13.0	10.0	5.0	10.0	0.6
0.15	13.0	11.0	5.5	10.0	0.6
0.22	13.0	13.0	6.0	10.0	0.6
0.33	13.0	14.0	8.0	10.0	0.6
0.15	18.0	11.0	5.0	15.0	0.8
0.22	18.0	11.0	5.0	15.0	0.8
0.33	18.0	12.0	6.0	15.0	0.8
0.47	18.0	13.0	7.0	15.0	0.8
0.68	18.0	15.5	8.0	15.0	0.8
1.0	18.0	18.0	9.0	15.0	0.8
0.47	26.0	14.5	6.0	22.5	0.8
0.68	26.0	16.5	7.0	22.5	0.8
1.0	26.0	17.0	8.0	22.5	0.8
1.5	26.0	19.0	10.0	22.5	0.8
2.2	26.0	22.0	12.0	22.5	0.8

➢ 最大溫度 125°C 尺寸表

R.V.	450VDC / 160 VAC				
Cap (μF)	W ±1.0	H ±1.0	T ±1.0	P	dØ ±0.05
0.47	18.0	11.0	5.0	15.0	0.8
0.68	18.0	12.0	6.0	15.0	0.8
1.0	18.0	13.0	7.0	15.0	0.8
1.5	18.0	17.0	8.0	15.0	0.8
2.0	18.0	18.0	9.0	15.0	0.8
2.2	18.0	18.0	10.0	15.0	0.8

R.V.	520 VDC / 200 VAC				
Cap (μF)	W ±1.0	H ±1.0	T ±1.0	P	dØ ±0.05
0.33	18.0	12.0	6.0	15.0	0.8
0.47	18.0	13.0	7.0	15.0	0.8
0.68	18.0	14.5	8.5	15.0	0.8
1.0	18.0	18.0	9.0	15.0	0.8
1.5	18.0	19.0	11.0	15.0	0.8

R.V.	630 VDC / 200 VAC				
Cap (μF)	W ±1.0	H ±1.0	T ±1.0	P	dØ ±0.05
0.22	18.0	12.0	6.0	15.0	0.8
0.33	18.0	13.0	7.0	15.0	0.8
0.47	18.0	14.0	8.0	15.0	0.8
1.0	18.0	18.0	9.0	15.0	0.8
1.0	18.0	19.0	11.0	15.0	0.8

特點 Feature :

- 能承受較高的溫度

  Can withstand higher temperatures

- 尺寸及腳距齊全

  Dimensions and Pitch are complete

應用 Application :

- 標準用法

  General purpose usage

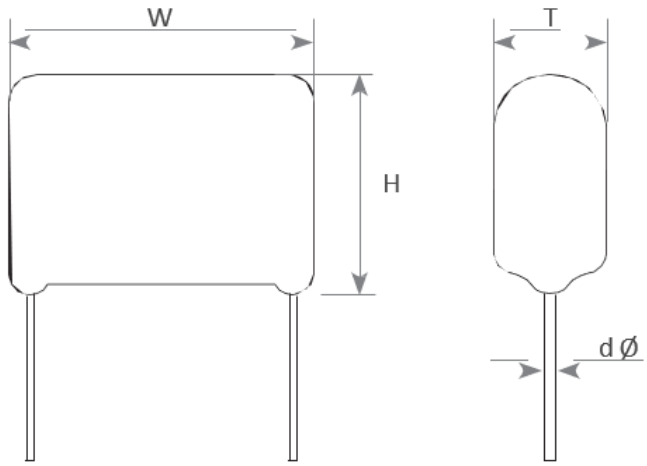

電氣特性 ELECTRICAL CHARACTERISTICS :

額定電壓 Rated Voltage	100, 250, 400, 630 VDC
最大運行溫度 Maximum Operating Temperature	– 40°C ~ + 125°C 間(電壓降超過 85°C的情況下) -40°C to +125°C (Voltage derating in case of over 85°C.)
容量範圍 Capacitance Range	0.01μF ~ 10 μF
容量誤差 Capacitance Tolerance	± 5% (J), ± 10% (K)
絕緣電阻 Insulation Resistance	>=9,000 MΩ (C<=0.33uF), >=3,000 MΩ*uF/C (C>0.33uF)
耐壓 Withstand Voltage	[Between Terminal] Nothing abnormal shall be found, Apply 1.5times of Ur for 60 +/-5sec. Or 1.6 times of Ur for 2 sec. for 2 sec. [Between Terminals & Enclosure] Nothing abnormal shall be found, Apply 2 timesof rated voltage for 2 to 5 sec.
損耗角 Dissipation Factor	<=0.01(1%) at 1 KHz

R.V.	100VDC				
Cap (μf)	W ±1.0	H ±1.0	T ±1.0	P	Dø ±0.05
0.10	10.5	7.5	4.0	7.5	0.6
0.12	10.5	7.5	4.0	7.5	0.6
0.15	10.5	8.0	4.5	7.5	0.6
0.18	10.5	8.5	5.0	7.5	0.6
0.22	10.5	8.5	5.0	7.5	0.6
0.27	10.5	9.5	5.5	7.5	0.6
0.33	10.5	10.0	6.0	7.5	0.6
0.39	10.5	10.5	6.0	7.5	0.6
0.47	10.5	12.0	6.0	7.5	0.6
0.56	13.0	11.0	5.5	10.0	0.6
0.68	13.0	11.5	6.0	10.0	0.6
0.82	13.0	13.0	6.0	10.0	0.6
1.0	13.0	14.0	6.5	10.0	0.6
1.2	18.5	12.5	5.5	15.0	0.8
1.5	18.5	13.5	6.0	15.0	0.8
1.8	18.5	14.0	6.5	15.0	0.8
2.2	18.5	15.0	7.0	15.0	0.8
2.7	18.5	16.0	7.5	15.0	0.8
3.3	18.5	16.5	8.5	15.0	0.8
3.9	26.0	16.0	7.0	22.5	0.8
4.7	26.0	17.0	7.5	22.5	0.8
5.6	26.0	17.5	8.0	22.5	0.8
6.8	26.0	18.5	9.0	22.5	0.8
8.2	26.0	20.0	10.0	22.5	0.8
10	26.0	21.0	11.5	22.5	0.8

R.V.	250VDC				
Cap (μf)	W ±1.0	H ±1.0	T ±1.0	P	Dø ±0.05
0.039	10.5	8.0	4.0	7.5	0.6
0.047	10.5	8.0	4.5	7.5	0.6
0.056	10.5	8.5	5.0	7.5	0.6
0.068	10.5	8.5	5.0	7.5	0.6
0.082	10.5	9.5	5.5	7.5	0.6
0.10	10.5	10.0	6.0	7.5	0.6
0.12	10.5	10.5	6.5	7.5	0.6
0.15	10.5	11.0	7.0	7.5	0.6
0.18	13.0	9.0	4.5	10.0	0.6
0.22	13.0	11.0	5.0	10.0	0.6
0.27	13.0	11.5	6.0	10.0	0.6
0.33	13.0	12.0	6.5	10.0	0.6
0.39	18.5	12.0	5.0	15.0	0.8
0.47	18.5	13.0	5.5	15.0	0.8
0.56	18.5	13.0	6.0	15.0	0.8
0.68	18.5	13.5	6.0	15.0	0.8
0.82	18.5	14.0	7.0	15.0	0.8
1.0	18.5	15.0	8.5	15.0	0.8
1.2	18.5	15.5	8.5	15.0	0.8
1.5	18.5	16.5	9.5	15.0	0.8
1.8	26.0	16.0	7.5	22.5	0.8
2.2	26.0	17.0	8.5	22.5	0.8
2.7	26.0	18.0	9.5	22.5	0.8
3.3	26.0	19.0	10.5	22.5	0.8
3.9	26.0	21.5	10.5	22.5	0.8
4.7	26.0	22.0	12.0	22.5	0.8
5.6	31.0	22.0	12.0	27.5	0.8
6.8	31.0	23.5	13.0	27.5	0.8
8.2	31.0	25.0	14.5	27.5	0.8
10	31.0	26.5	16.5	27.5	0.8

R.V.	400VDC				
Cap (μf)	W ±1.0	H ±1.0	T ±1.0	P	Dø ±0.05
0.015	10.5	8.0	4.5	7.5	0.6
0.018	10.5	8.5	5.0	7.5	0.6
0.022	10.5	8.5	5.0	7.5	0.6
0.027	10.5	9.0	5.5	7.5	0.6
0.033	10.5	9.5	6.0	7.5	0.6
0.039	13.0	8.5	4.5	10.0	0.6
0.047	13.0	9.0	5.0	10.0	0.6
0.056	13.0	9.5	5.5	10.0	0.6
0.068	13.0	11.0	5.5	10.0	0.6
0.082	13.0	11.5	5.5	10.0	0.6
0.1	13.0	12.0	6.5	10.0	0.6
0.12	18.5	10.5	5.0	15.0	0.8
0.15	18.5	11.5	5.5	15.0	0.8
0.18	18.5	12.0	6.0	15.0	0.8
0.22	18.5	13.5	6.0	15.0	0.8
0.27	18.5	14.0	7.0	15.0	0.8
0.33	18.5	15.0	7.5	15.0	0.8
0.39	18.5	15.5	8.5	15.0	0.8
0.47	18.5	17.5	8.5	15.0	0.8
0.56	26.0	16.0	7.5	22.5	0.8
0.68	26.0	17.0	8.0	22.5	0.8
0.82	26.0	17.5	9.0	22.5	0.8
1.0	26.0	18.5	10.0	22.5	0.8
1.2	26.0	20.0	11.0	22.5	0.8
1.5	31.0	19.5	11.0	27.5	0.8
1.8	31.0	21.0	12.0	27.5	0.8
2.2	31.0	23.5	13.0	27.5	0.8

R.V.	630VDC				
Cap (μf)	W ±1.0	H ±1.0	T ±1.0	P	Dø ±0.05
0.01	13.0	8.0	5.0	10.0	0.6
0.012	13.0	8.5	5.0	10.0	0.6
0.015	13.0	9.5	5.5	10.0	0.6
0.018	13.0	11.0	5.5	10.0	0.6
0.022	13.0	11.5	6.0	10.0	0.6
0.027	13.0	12.0	6.5	10.0	0.6
0.033	13.0	12.5	7.0	10.0	0.6
0.039	13.0	14.0	7.0	10.0	0.6
0.047	13.0	15.0	7.5	10.0	0.6
0.056	18.5	11.0	5.5	15.0	0.8
0.068	18.5	11.5	6.0	15.0	0.8
0.082	18.5	12.0	6.5	15.0	0.8
0.1	18.5	13.0	7.0	15.0	0.8
0.12	18.5	14.5	7.0	15.0	0.8
0.15	18.5	15.5	8.0	15.0	0.8
0.18	18.5	16.0	8.5	15.0	0.8
0.22	18.5	16.5	9.0	15.0	0.8
0.27	26.0	16.5	7.5	22.5	0.8
0.33	26.0	17.0	8.5	22.5	0.8
0.39	26.0	18.0	9.0	22.5	0.8
0.47	26.0	19.0	10.0	22.5	0.8
0.56	26.0	20.0	11.0	22.5	0.8
0.68	26.0	21.5	12.5	22.5	0.8
0.82	31.0	21.0	12.0	27.5	0.8
1.0	31.0	22.0	13.5	27.5	0.8
1.2	31.0	23.5	15.0	27.5	0.8
1.5	31.0	26.5	16.0	27.5	0.8
1.8	31.0	28.0	18.0	27.5	0.8
2.2	31.0	30.5	20.0	27.5	0.8

特點 Feature :

- 齊全的容量及電壓選擇

  Complete capacity and voltage selection

- 超小型尺寸

  Ultra-miniature size

應用 Application :

- 標準用法

  General purpose usage

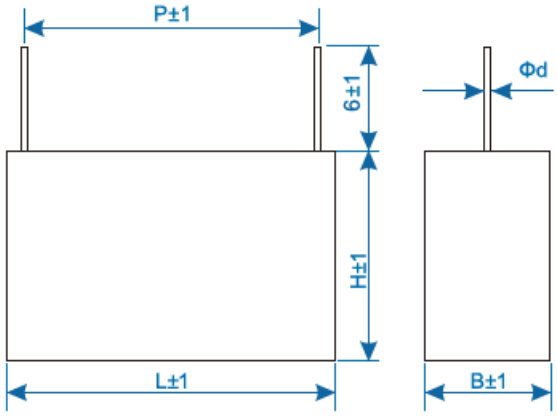

電氣特性 ELECTRICAL CHARACTERISTICS :

額定電壓 Rated Voltage	63, 100, 250, 400, 630 VDC
最大運行溫度 Maximum Operating Temperature	– 55°C ~ + 105°C (-55°C to +105°C for which the capacitor can be operated continuously at rated voltage.)
容量範圍 Capacitance Range	0.001μF ~ 1.2 μF
容量誤差 Capacitance Tolerance	± 5% (J), ± 10% (K)
絕緣電阻 Insulation Resistance	Cap≤334 時 IR≥3000 MΩ, Cap > 334 時 IR≥1000 MΩμF
耐壓 Withstand Voltage	Ⅰ型: 1.6UR 2S Ⅱ型: 1.4UR 2S

R.V.	63VDC				
Cap (μF)	W ±1.0	H ±1.0	B ±1.0	P	dØ ±0.05
0.001	7.2	6.5	2.5	5.0	0.5
0.0012	7.2	6.5	2.5	5.0	0.5
0.0015	7.2	6.5	2.5	5.0	0.5
0.0018	7.2	6.5	2.5	5.0	0.5
0.0022	7.2	6.5	2.5	5.0	0.5
0.0027	7.2	6.5	2.5	5.0	0.5
0.0033	7.2	6.5	2.5	5.0	0.5
0.0039	7.2	6.5	2.5	5.0	0.5
0.0047	7.2	6.5	2.5	5.0	0.5
0.0056	7.2	6.5	2.5	5.0	0.5
0.0068	7.2	6.5	2.5	5.0	0.5
0.0082	7.2	6.5	2.5	5.0	0.5
0.01	7.2	6.5	2.5	5.0	0.5
0.012	7.2	6.5	2.5	5.0	0.5
0.015	7.2	6.5	2.5	5.0	0.5
0.018	7.2	6.5	2.5	5.0	0.5
0.022	7.2	6.5	2.5	5.0	0.5
0.027	7.2	6.5	2.5	5.0	0.5
0.033	7.2	6.5	2.5	5.0	0.5
0.039	7.2	6.5	2.5	5.0	0.5
0.047	7.2	6.5	2.5	5.0	0.5
0.056	7.2	6.5	2.5	5.0	0.5
0.068	7.2	6.5	2.5	5.0	0.5
0.082	7.2	6.5	2.5	5.0	0.5
0.1	7.2	6.5	2.5	5.0	0.5
0.12	7.2	6.5	2.5	5.0	0.5
0.15	7.2	7.5	3.5	5.0	0.5
0.18	7.2	7.5	3.5	5.0	0.5
0.22	7.2	7.5	3.5	5.0	0.5
0.27	7.2	7.5	3.5	5.0	0.5
0.33	7.2	9.5	4.5	5.0	0.6
0.39	7.2	9.5	4.5	5.0	0.6
0.47	7.2	9.5	4.5	5.0	0.6
0.56	7.2	11.0	6.0	5.0	0.6
0.68	7.2	11.0	6.0	5.0	0.6
0.82	7.2	11.0	6.0	5.0	0.6
1.0	7.2	11.0	6.0	5.0	0.6

R.V.	100VDC				
Cap (μf)	W ±1.0	H ±1.0	B ±1.0	P	Dø ±0.05
0.001	7.2	6.5	2.5	5.0	0.5
0.0012	7.2	6.5	2.5	5.0	0.5
0.0015	7.2	6.5	2.5	5.0	0.5
0.0018	7.2	6.5	2.5	5.0	0.5
0.0022	7.2	6.5	2.5	5.0	0.5
0.0027	7.2	6.5	2.5	5.0	0.5
0.0033	7.2	6.5	2.5	5.0	0.5
0.0039	7.2	6.5	2.5	5.0	0.5
0.0047	7.2	6.5	2.5	5.0	0.5
0.0056	7.2	6.5	2.5	5.0	0.5
0.0068	7.2	6.5	2.5	5.0	0.5
0.0082	7.2	6.5	2.5	5.0	0.5
0.01	7.2	6.5	2.5	5.0	0.5
0.012	7.2	6.5	2.5	5.0	0.5
0.015	7.2	6.5	2.5	5.0	0.5
0.018	7.2	6.5	2.5	5.0	0.5
0.022	7.2	6.5	2.5	5.0	0.5
0.027	7.2	6.5	2.5	5.0	0.5
0.033	7.2	6.5	2.5	5.0	0.5
0.039	7.2	6.5	2.5	5.0	0.5
0.047	7.2	6.5	2.5	5.0	0.5
0.056	7.2	6.5	2.5	5.0	0.5
0.068	7.2	6.5	2.5	5.0	0.5
0.082	7.2	6.5	2.5	5.0	0.5
0.1	7.2	6.5	2.5	5.0	0.5
0.12	7.2	7.5	3.5	5.0	0.5
0.15	7.2	7.2	4.5	5.0	0.6
0.18	7.2	7.2	4.5	5.0	0.6
0.22	7.2	7.2	4.5	5.0	0.6
0.27	7.2	9.5	4.5	5.0	0.6
0.33	7.2	11.0	6.0	5.0	0.6
0.39	7.2	11.0	6.0	5.0	0.6
0.47	7.2	11.0	6.0	5.0	0.6
0.56	7.2	11.0	6.0	5.0	0.6
0.68	7.2	11.0	6.0	5.0	0.6
0.82	7.2	11.0	6.0	5.0	0.6
1.0	7.2	11.0	6.0	5.0	0.6

R.V.	250VDC				
Cap (мf)	W ±1.0	H ±1.0	B ±1.0	P	Dø ±0.05
0.001	7.2	6.5	2.5	5.0	0.5
0.0012	7.2	6.5	2.5	5.0	0.5
0.0015	7.2	6.5	2.5	5.0	0.5
0.0018	7.2	6.5	2.5	5.0	0.5
0.0022	7.2	6.5	2.5	5.0	0.5
0.0027	7.2	6.5	2.5	5.0	0.5
0.0033	7.2	6.5	2.5	5.0	0.5
0.0039	7.2	6.5	2.5	5.0	0.5
0.0047	7.2	6.5	2.5	5.0	0.5
0.0056	7.2	6.5	2.5	5.0	0.5
0.0068	7.2	6.5	2.5	5.0	0.5
0.0082	7.2	6.5	2.5	5.0	0.5
0.01	7.2	6.5	2.5	5.0	0.5
0.012	7.2	6.5	2.5	5.0	0.5
0.015	7.2	6.5	2.5	5.0	0.5
0.018	7.2	6.5	2.5	5.0	0.5
0.022	7.2	6.5	2.5	5.0	0.5
0.027	7.2	7.5	3.5	5.0	0.5
0.033	7.2	7.5	3.5	5.0	0.5
0.039	7.2	7.5	3.5	5.0	0.5
0.047	7.2	7.5	3.5	5.0	0.5
0.056	7.2	7.5	3.5	5.0	0.5
0.068	7.2	9.5	4.5	5.0	0.6
0.082	7.2	9.5	4.5	5.0	0.6
0.1	7.2	9.5	4.5	5.0	0.6
0.12	7.2	11.0	6.0	5.0	0.6
0.15	7.2	11.0	6.0	5.0	0.6
0.18	7.2	11.0	6.0	5.0	0.6
0.22	7.2	11.0	6.0	5.0	0.6

R.V.	400VDC				
Cap (μF)	W ±1.0	H ±1.0	B ±1.0	P	dØ ±0.05
0.001	7.2	6.5	2.5	5.0	0.5
0.0012	7.2	6.5	2.5	5.0	0.5
0.0015	7.2	6.5	2.5	5.0	0.5
0.0018	7.2	6.5	2.5	5.0	0.5
0.0022	7.2	6.5	2.5	5.0	0.5
0.0027	7.2	6.5	2.5	5.0	0.5
0.0033	7.2	6.5	2.5	5.0	0.5
0.0039	7.2	6.5	2.5	5.0	0.5
0.0047	7.2	6.5	2.5	5.0	0.5
0.0056	7.2	7.5	2.5	5.0	0.5
0.0068	7.2	7.5	3.5	5.0	0.5
0.0082	7.2	7.5	3.5	5.0	0.5
0.01	7.2	9.5	4.5	5.0	0.6
0.012	7.2	9.5	4.5	5.0	0.6
0.015	7.2	9.5	4.5	5.0	0.6
0.018	7.2	9.5	4.5	5.0	0.6
0.022	7.2	9.5	4.5	5.0	0.6
0.027	7.2	11.0	6.0	5.0	0.6
0.033	7.2	11.0	6.0	5.0	0.6
0.039	7.2	11.0	6.0	5.0	0.6
0.047	7.2	11.0	6.0	5.0	0.6

特點 Feature :

- 高電壓、大電流

  High voltage, High current

- 低阻抗

  Low ESR

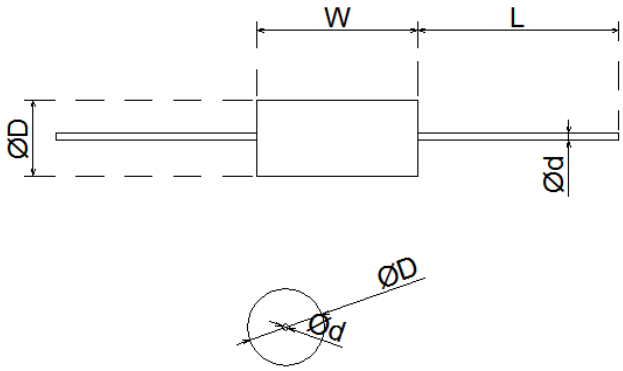

應用 Application :

- 光伏和風力逆變器

  Photovoltaic and wind inverters

  音響產業應用

  Audio industry application

電氣特性 ELECTRICAL CHARACTERISTICS :

額定電壓 Rated Voltage	100,250,400,630 VDC
最大運行溫度 Maximum Operating Temperature	– 40°C ~ +110°C
容量範圍 Capacitance Range	0.01uF~ 100uF
容量誤差 Capacitance Tolerance	± 5% (J), ± 10% (K)
絕緣電阻 Insulation Resistance	≥15,000 Mohm (C≤0.33uf), ≥5,000 Mohm*uF/C (C>0.33uf)
耐壓 Withstand Voltage	[Between Terminal] Apply 1.5times of Ur for 60 +/-5sec. or 1.75times of Ur for 2 sec. [Between Terminals &Enclosure] Apply 2times of rated voltage for 2 to 5 sec.
損耗角 Dissipation Factor	≤ 0.001(0.1%) at 1 KHz

R.V.	100 VDC			
Cap (μF)	W max.	D max.	dØ ±0.05	L min.
0.1	13.0	6.0	0.6	38.0
0.22	13.0	7.5	0.6	38.0
0.33	19.0	7.0	0.6	38.0
0.47	19.0	8.0	0.6	38.0
0.68	26.0	8.0	0.6	38.0
1	26.0	9.5	0.8	38.0
1.5	26.0	11.5	0.8	38.0
2.2	33.0	11.0	0.8	38.0
2.7	33.0	12.5	0.8	38.0
3.3	33.0	13.5	0.8	38.0
3.9	33.0	14.5	0.8	38.0
4.7	33.0	16.0	0.8	38.0
5.6	33.0	17.0	0.8	38.0
6.8	33.0	19.0	0.8	38.0
7.5	33.0	19.5	1.0	38.0
8.2	33.0	20.0	1.0	38.0
10.0	33.0	22.0	1.0	38.0
12.0	47.0	19.5	1.0	38.0
15.0	47.0	22.0	1.0	38.0
18.0	47.0	23.5	1.0	38.0
22.0	47.0	26.5	1.0	38.0
27.0	55.0	25.5	1.0	38.0
33.0	55.0	28.0	1.0	38.0
39.0	55.0	31.0	1.0	38.0
47.0	55.0	33.0	1.0	38.0
56.0	55.0	37.0	1.0	38.0
68.0	60.0	38.5	1.0	38.0
75.0	60.0	41.0	1.0	38.0
82.0	60.0	42.5	1.0	38.0
100.0	65.0	43.0	1.0	38.0

R.V.	250 VDC			
Cap (μF)	W max.	D max.	dØ ±0.05	L min.
0.1	13.0	7.0	0.6	38.0
0.2	19.0	7.5	0.6	38.0
0.3	26.0	7.0	0.6	38.0
0.5	26.0	8.5	0.6	38.0
0.7	26.0	9.5	0.8	38.0
1.0	26.0	11.5	0.8	38.0
1.5	26.0	13.5	0.8	38.0
2.2	26.0	16.5	0.8	38.0
2.7	33.0	15.0	0.8	38.0
3.3	33.0	16.5	0.8	38.0
3.9	33.0	18.0	0.8	38.0
4.7	33.0	19.5	1.0	38.0
5.6	33.0	21.0	1.0	38.0
6.8	33.0	23.0	1.0	38.0
7.5	47.0	19.5	1.0	38.0
8.2	47.0	20.0	1.0	38.0
10.0	47.0	22.0	1.0	38.0
12.0	47.0	24.0	1.0	38.0
15.0	47.0	27.0	1.0	38.0
18.0	47.0	29.5	1.0	38.0
22.0	60.0	28.0	1.0	38.0
27.0	60.0	31.0	1.0	38.0
33.0	60.0	34.0	1.0	38.0
39.0	60.0	37.0	1.0	38.0
47.0	60.0	41.0	1.0	38.0

R.V.	400 VDC			
Cap (μF)	W max.	D max.	dØ ±0.05	L min.
0.1	19.0	6.5	0.6	38.0
0.2	19.0	8.5	0.6	38.0
0.3	26.0	8.5	0.6	38.0
0.5	26.0	9.5	0.8	38.0
0.7	26.0	11.5	0.8	38.0
1.0	26.0	13.5	0.8	38.0
1.5	33.0	13.5	0.8	38.0
2.2	33.0	16.5	0.8	38.0
2.7	33.0	18.0	0.8	38.0
3.3	33.0	19.5	1.0	38.0
3.9	33.0	21.5	1.0	38.0
4.7	47.0	18.5	1.0	38.0
5.6	47.0	20.0	1.0	38.0
6.8	47.0	22.0	1.0	38.0
7.5	47.0	23.0	1.0	38.0
8.2	47.0	24.5	1.0	38.0
10.0	47.0	27.0	1.0	38.0
12.0	47.0	29.5	1.0	38.0
15.0	55.0	29.0	1.0	38.0
18.0	55.0	31.5	1.0	38.0
22.0	55.0	35.0	1.0	38.0
27.0	55.0	38.5	1.0	38.0
33.0	55.0	42.0	1.0	38.0

R.V.	630 VDC			
Cap (μF)	W max.	D max.	dØ ±0.05	L min.
0.1	19.0	8.0	0.6	38.0
0.2	26.0	9.0	0.8	38.0
0.3	26.0	10.5	0.8	38.0
0.5	26.0	12.5	0.8	38.0
0.7	33.0	12.5	0.8	38.0
1.0	33.0	15.0	0.8	38.0
1.5	33.0	18.0	0.8	38.0
2.2	33.0	21.5	1.0	38.0
2.7	33.0	23.5	1.0	38.0
3.3	47.0	20.5	1.0	38.0
3.9	47.0	22.5	1.0	38.0
4.7	47.0	24.5	1.0	38.0
5.6	47.0	27.0	1.0	38.0
6.8	47.0	29.5	1.0	38.0
7.5	47.0	30.5	1.0	38.0
8.2	47.0	32.0	1.0	38.0
10.0	55.0	31.5	1.0	38.0
12.0	55.0	34.5	1.0	38.0
15.0	55.0	38.0	1.0	38.0
18.0	55.0	42.0	1.0	38.0

應用 Application :

- 跨線、EMI 濾波器

  Across the line、EMI Filter

- 天線耦合

  Antenna coupling

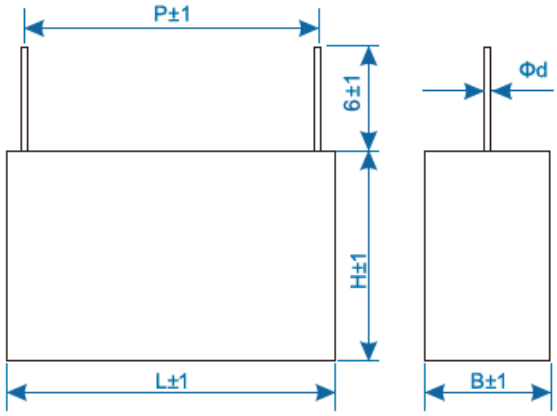

電氣特性 ELECTRICAL CHARACTERISTICS :

引用標準 Related Documents	UL 60384, CSA E60384-14, EN 60384-14:2013 (ed.4), IEC 60384 –14:2013
國際認證 Approval Marks	UL/CL- E209251, ENEC-SE-ENEC-2002177R1, CQC-CQC13001099627
額定電壓 Rated Voltage	275, 300, 310, 330, 440, 480 VAC
最大運行溫度 Maximum Operating Temperature	– 40°C ~ + 110°C (– 40°C ~ + 110°C for which the capacitor can be operated continuously at rated voltage.)
容量範圍 Capacitance Range	0.001μF ~ 10 μF
容量誤差 Capacitance Tolerance	± 5% (J), ± 10% (K)
絕緣電阻 Insulation Resistance	≥15,000 Mohm (C≤0.33uf), ≥5,000 Mohm*uF/C (C>0.33uf)
耐壓 Withstand Voltage	[Between Terminal] Nothing abnormal shall be found, Apply 4.3*Ur (DC) for 60 sec [Between Terminals &Enclosure] Nothing abnormal shall be found, Apply 2*Ur+1,500VAC for 2 to 5 sec. Min. 2,000VAC
損耗角 Dissipation Factor	≤ 0.001(0.1%) at 1 KHz

R.V.	275/300/310/330 VAC				
Cap (μF)	W ±1.0	H ±1.0	B ±1.0	P	dØ ±0.05
0.001~0.018	10.0	9.0	4.0	7.5	0.6
0.0068~0.047	10.5	11.0	5.0	7.5	0.6
0.001~0.047	13.0	11.0	5.0	10.0	0.6
0.027~0.15	13.0	12.0	6.0	10.0	0.6
0.039~0.047	13.0	13.0	7.0	10.0	0.6
0.056~0.15	13.0	14.0	8.0	10.0	0.6
0.001~0.056	18.0	11.0	5.0	15.0	0.8
0.039~0.12	18.0	12.0	6.0	15.0	0.8
0.056~0.15	18.0	13.5	6.0	15.0	0.8
0.068~0.1	17.0	11.0	5.5	15.0	0.8
0.068~0.22	17.0	15.5	7.5	15.0	0.8
0.12~0.33	17.0	16.5	9.5	15.0	0.8
0.15~0.47	17.0	19.0	11.0	15.0	0.8
0.56~0.68	17.0	21.0	12.0	15.0	0.8
0.1	18.0	14.5	8.5	15.0	0.8
0.039~0.22	25.0	14.5	6.0	22.5	0.8
0.15~0.33	26.5	16.5	7.0	22.5	0.8
0.27~0.68	26.5	19.0	10.0	22.5	0.8
0.33~0.82	26.0	20.0	11.0	22.5	0.8
0.39~0.47	26.5	17.0	8.5	22.5	0.8
0.47~0.56	25.0	23.5	14.0	22.5	0.8
0.52~0.56	25.0	19.0	8.5	22.5	0.8
0.56~0.68	26.0	25.0	15.0	22.5	0.8
0.47~1.0	26.0	21.5	12.0	22.5	0.8
0.15~0.47	31.5	16.5	7.5	27.5	0.8
0.33~0.82	31.5	20.0	11.0	27.5	0.8
0.56~1.0	31.5	22.5	13.0	27.5	0.8
0.6~1.8	31.5	25.0	14.0	27.5	0.8

R.V.	275/300/310/330 VAC				
Cap (μF)	W ±1.0	H ±1.0	B ±1.0	P	dØ ±0.05
0.33	32.0	12.0	18.0	27.5	0.8
0.47	32.0	12.0	22.0	27.5	0.8
0.68~1.0	32.0	16.0	22.0	27.5	0.8
0.82	32.0	28.0	14.0	27.5	0.8
1	30.0	21.0	11.5	27.5	0.8
1.0~1.5	32.0	18.5	31.0	27.5	0.8
1.0~2.2	32.0	28.0	18.0	27.5	0.8
1.2~1.5	32.0	29.0	19.0	27.5	0.8
1.5~2.7	31.0	31.0	22.0	27.5	0.8
1.8~2.2	32.0	37.0	22.0	27.5	0.8
0.33~1.5	37.0	24.0	13.5	32.5	0.8
1.0~2.2	37.0	26.5	16.0	32.5	0.8
1.0~2.7	37.0	28.5	18.0	32.5	0.8
1.2~3.3	35.5	31.0	20.0	32.5	0.8
1.5~2.2	37.0	34.0	22.0	32.5	0.8
0.3~0.82	41.0	22.0	11.0	37.5	0.8/1.0
0.82~2.2	41.0	26.0	12.0	37.5	0.8/1.0
1	42.0	15.0	24.0	37.5	0.8/1.0
1.2~2.7	41.0	28.0	14.0	37.5	0.8/1.0
1.5~1.8	41.0	30.0	16.0	37.5	0.8/1.0
1.8~3.9	41.0	32.0	17.0	37.5	0.8/1.0
2.7~6.8	41.0	37.0	22.0	37.5	0.8/1.0
3.9~10.0	41.0	43.0	28.0	37.5	0.8/1.0
1.5	42.0	19.0	24.0	37.5	0.8/1.0
4.7	42.0	45.0	30.0	37.5	0.8/1.0
8.2	41.5	41.0	27.5	37.5	0.8/1.0
3.3~3.9	51.0	27.5	17.5	47.5	0.8/1.0
4.4~4.7	51.0	30.5	20.0	47.5	0.8/1.0

R.V.	275/300/310/330 VAC				
Cap (μF)	W ±1.0	H ±1.0	B ±1.0	P	dØ ±0.05
4.4~10	51.0	43.5	29.0	47.5	0.8/1.0
5.6~6.8	51.0	34.0	22.0	47.5	0.8/1.0
6.8~10	51.0	49.5	35.0	47.5	0.8/1.0
4.4~5.6	57.0	38.0	24.0	52.5	0.8/1.0
5.6~6.8	57.0	45.0	30.0	52.5	0.8/1.0
6.8~8.2	57.0	50.0	35.0	52.5	0.8/1.0
6.8	57.0	30.0	44.0	52.5	0.8/1.0
10	57.0	55.0	45.0	52.5	0.8/1.0

R.V.	440/480 VAC				
Cap (μF)	W ±1.0	H ±1.0	B ±1.0	P	dØ ±0.05
0.001~0.0056	10.0	9.0	4.0	7.5	0.6
0.0068~0.01	10.5	11.0	5.0	7.5	0.6
0.012~0.015	10.5	12.0	6.0	7.5	0.6
0.001~0.022	13.0	11.0	5.0	10.0	0.6
0.027~0.033	13.0	12.0	6.0	10.0	0.6
0.039~0.047	13.0	13.0	7.0	10.0	0.6
0.056	13.0	14.0	8.0	10.0	0.6
0.001~0.033	18.0	11.0	5.0	15.0	0.8
0.039~0.056	18.0	12.0	6.0	15.0	0.8
0.056	18.0	13.5	6.0	15.0	0.8
0.068~0.1	17.0	11.0	5.5	15.0	0.8
0.1	18.0	14.5	8.5	15.0	0.8
0.12~0.15	17.0	16.5	9.5	15.0	0.8
0.15~0.18	17.0	19.0	11.0	15.0	0.8
0.039~0.12	25.0	14.5	6.0	22.5	0.8
0.47~0.56	25.0	23.5	14.0	22.5	0.8
0.39	26.0	20.0	11.0	22.5	0.8
0.47	26.0	21.5	12.0	22.5	0.8
0.56~0.68	26.0	25.0	15.0	22.5	0.8
0.15	26.5	16.5	7.0	22.5	0.8
0.18~0.22	26.5	17.5	8.5	22.5	0.8
0.27	26.5	19.0	10.0	22.5	0.8
0.15~0.18	31.5	16.5	7.5	27.5	0.8
0.22~0.27	32.0	18.0	9.0	27.5	0.8
0.33	32.0	12.0	18.0	27.5	0.8
0.39~0.47	31.5	20.0	11.0	27.5	0.8
0.56~0.68	31.5	22.5	13.0	27.5	0.8
0.6~0.82	31.5	25.0	14.0	27.5	0.8

R.V.	440/480 VAC				
Cap (μF)	W ±1.0	H ±1.0	B ±1.0	P	dØ ±0.05
0.47	32.0	22.0	12.0	27.5	0.8
0.68	32.0	16.0	22.0	27.5	0.8
0.82	32.0	28.0	14.0	27.5	0.8
1	32.0	16.0	22.0	27.5	0.8
1.0~1.2	32.0	28.0	18.0	27.5	0.8
1.0~1.5	32.0	18.5	31.0	27.5	0.8
1.2~1.5	32.0	29.0	19.0	27.5	0.8
1.5	31.0	31.0	22.0	27.5	0.8
1.8~2.2	32.0	37.0	22.0	27.5	0.8
0.33~0.82	37.0	24.0	13.5	32.5	0.8
0.8~1.0	37.0	26.5	16.0	32.5	0.8
1.0~1.2	37.0	28.5	18.0	32.5	0.8
1.2~1.5	35.5	31.0	20.0	32.5	0.8
1.5~2.2	37.0	34.0	22.0	32.5	0.8
0.3~0.82	41.0	22.0	11.0	37.5	0.8/1.0
0.82~1.5	41.0	26.0	12.0	37.5	0.8/1.0
1.2~1.5	41.0	28.0	14.0	37.5	0.8/1.0
1.5~1.8	41.0	30.0	16.0	37.5	0.8/1.0
1.8~2.2	41.0	32.0	17.0	37.5	0.8/1.0
2.2	41.0	33.5	19.5	37.5	0.8/1.0
2.7~3.3	41.0	37.0	22.0	37.5	0.8/1.0
3.9~4.7	41.0	43.0	28.0	37.5	0.8/1.0
3.3	41.5	41.0	27.5	37.5	0.8/1.0
1	42.0	15.0	24.0	37.5	0.8/1.0
1.5	42.0	19.0	24.0	37.5	0.8/1.0
4.7	42.0	45.0	30.0	37.5	0.8/1.0
4.4~5.6	51.0	43.5	29.0	47.5	0.8/1.0
6.8~8.2	51.0	49.5	35.0	47.5	0.8/1.0

R.V.	440/480 VAC				
Cap (μF)	W ±1.0	H ±1.0	B ±1.0	P	dØ ±0.05
6.8(M)	57.0	30.0	44.0	52.5	0.8/1.0
4.4~5.6	57.0	38.0	24.0	52.5	0.8/1.0
5.6~6.8	57.0	45.0	30.0	52.5	0.8/1.0
6.8~10	57.0	50.0	35.0	52.5	0.8/1.0
10	57.0	55.0	45.0	52.5	0.8/1.0

應用 Application :

- 跨線、EMI 濾波器

  Across the line、EMI Filter

- 天線耦合

  Antenna coupling

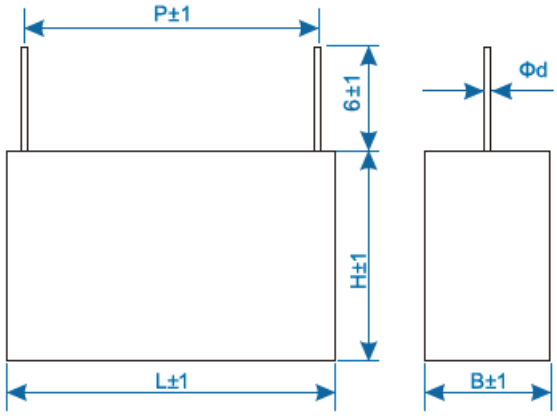

電氣特性 ELECTRICAL CHARACTERISTICS :

引用標準 Related Documents	UL 60384, CSA E60384-14, EN 60384-14:2013 (ed.4), IEC 60384 –14:2013
國際認證 Approval Marks	UL/CL- E209251, ENEC-SE-ENEC-2002177R1, CQC-CQC13001099627
額定電壓 Rated Voltage	275, 300, 310, 330, 440, 480 VAC
最大運行溫度 Maximum Operating Temperature	– 40°C ~ + 110°C (– 40°C ~ + 110°C for which the capacitor can be operated continuously at rated voltage.)
容量範圍 Capacitance Range	0.001μF ~ 55 μF
容量誤差 Capacitance Tolerance	± 5% (J), ± 10% (K)
絕緣電阻 Insulation Resistance	≥15,000 Mohm (C≤0.33uf), ≥5,000 Mohm*uF/C (C>0.33uf)
耐壓 Withstand Voltage	[Between Terminal] Nothing abnormal shall be found, Apply 4.3*Ur (DC) for 60 sec [Between Terminals &Enclosure] Nothing abnormal shall be found, Apply 2*Ur+1,500VAC for 2 to 5 sec. Min. 2,000VAC
損耗角 Dissipation Factor	≤ 0.001(0.1%) at 1 KHz

275/300/310/330 VAC					
Cap (μf)	W ±1.0	H ±1.0	B ±1.0	P	Dø ±0.05
0.001~0.018	10.0	9.0	4.0	7.5	0.6
0.0068~0.047	10.5	11.0	5.0	7.5	0.6
0.012~0.068	10.5	12.0	6.0	7.5	0.6
0.001~0.056	13.0	11.0	5.0	10.0	0.6
0.027~0.15	13.0	12.0	6.0	10.0	0.6
0.039~0.047	13.0	13.0	7.0	10.0	0.6
0.056~0.22	13.0	14.0	8.0	10.0	0.6
0.001~0.056	18.0	11.0	5.0	15.0	0.8
0.039~0.12	18.0	12.0	6.0	15.0	0.8
0.056~0.33	18.0	13.5	6.0	15.0	0.8
0.068~0.22	17.0	11.0	5.5	15.0	0.8
0.068~0.47	17.0	15.5	7.5	15.0	0.8
0.1~0.33	18.0	14.5	8.5	15.0	0.8
0.12~0.68	17.0	16.5	9.5	15.0	0.8
0.15~1.0	17.0	19.0	11.0	15.0	0.8
0.56~0.68	17.0	21.0	12.0	15.0	0.8
0.039~0.22	25.0	14.5	6.0	22.5	0.8
0.15~0.47	26.5	16.5	7.0	22.5	0.8
0.22	25.0	17.5	8.0	22.5	0.8
0.27~1.0	26.5	19.0	10.0	22.5	0.8
0.33~0.82	26.0	20.0	11.0	22.5	0.8
0.39~0.68	26.5	17.0	8.5	22.5	0.8
0.47~1.5	25.0	23.5	14.0	22.5	0.8
0.47~1.0	26.0	21.5	12.0	22.5	0.8
0.52~0.56	25.0	19.0	8.5	22.5	0.8
0.56~0.68	25.0	17.0	8.5	22.5	0.8
0.56~2.2	26.0	25.0	15.0	22.5	0.8
0.15~0.47	31.5	16.5	7.5	27.5	0.8

275/300/310/330 VAC					
Cap (μf)	W ±1.0	H ±1.0	B ±1.0	P	Dø ±0.05
0.22~0.27	32.0	18.0	9.0	27.5	0.8
0.27	32.0	18.0	9.0	27.5	0.8
0.33	32.0	12.0	18.0	27.5	0.8
0.33~0.82	31.5	20.0	11.0	27.5	0.8
0.47	32.0	12.0	22.0	27.5	0.8
0.56~1.5	31.5	22.5	13.0	27.5	0.8
0.6~2.2	31.5	25.0	14.0	27.5	0.8
0.68~1.0	32.0	16.0	22.0	27.5	0.8
0.82~3.3	32.0	28.0	18.0	27.5	0.8
1.0	30.0	21.0	11.5	27.5	0.8
1.0~1.5	32.0	18.5	31.0	27.5	0.8
1.2~1.5	32.0	29.0	19.0	27.5	0.8
1.5~5.6	31.0	31.0	22.0	27.5	0.8
1.8~2.2	32.0	37.0	22.0	27.5	0.8
0.33~1.0	37.0	24.0	13.5	32.5	0.8
1.0	37.0	26.5	16.0	32.5	0.8
1.0~1.2	37.0	28.5	18.0	32.5	0.8
1.2~1.5	37.0	24.0	13.5	32.5	0.8
1.2~3.3	35.5	31.0	20.0	32.5	0.8
1.5~1.8	37.0	34.0	22.0	32.5	0.8
1.8	37.0	26.5	16.0	32.5	0.8
2.0~2.2	37.0	26.5	16.0	32.5	0.8
2.0~4.7	37.0	34.0	22.0	32.5	0.8
2.7	37.0	28.5	18.0	32.5	0.8
0.3~0.82	41.0	22.0	11.0	37.5	0.8/1.0
0.82~2.2	41.0	26.0	12.0	37.5	0.8/1.0
1.2~1.5	41.0	28.0	14.0	37.5	0.8/1.0
1.5~1.8	41.0	30.0	16.0	37.5	0.8/1.0

275/300/310/330 VAC					
Cap (μf)	W ±1.0	H ±1.0	B ±1.0	P	Dø ±0.05
1.8~2.2	41.0	32.0	17.0	37.5	0.8/1.0
2.2~4.7	41.0	33.5	19.5	37.5	0.8/1.0
2.7~3.3	41.0	37.0	22.0	37.5	0.8/1.0
3.9~4.7	41.0	43.0	28.0	37.5	0.8/1.0
18~22	51.0	35.0	24.0	47.5	0.8/1.0
3.3~3.9	51.0	27.5	17.5	47.5	0.8/1.0
4.4~30	51.0	43.5	29.0	47.5	0.8/1.0
4.4~4.7	51.0	30.5	20.0	47.5	0.8/1.0
5.6~15	51.0	34.0	22.0	47.5	0.8/1.0
6.8~50	51.0	49.5	35.0	47.5	0.8/1.0
20~30	57.0	38.0	24.0	51.5	0.8/1.0
20~40	57.0	45.0	30.0	51.5	0.8/1.0
30	58.0	30.0	44.0	51.5	0.8/1.0
30~50	58.0	50.0	35.0	51.5	0.8/1.0
30~50	58.0	55.0	45.0	51.5	0.8/1.0
35~40	57.0	30.0	44.0	51.5	0.8/1.0
35~45	57.0	50.0	35.0	51.5	0.8/1.0
35~45	57.0	55.0	45.0	51.5	0.8/1.0
40	57.5	50.0	35.0	51.5	0.8/1.0
40	58.0	55.0	45.0	51.5	0.8/1.0
50	58.0	55.0	45.0	51.5	0.8/1.0
50~55	58.0	70.0	55.0	51.5	0.8/1.0
4.4~5.6	57.0	38.0	24.0	52.5	0.8/1.0
5.6~6.8	57.0	45.0	30.0	52.5	0.8/1.0
6.8~10	57.0	50.0	35.0	52.5	0.8/1.0
6.8	57.0	30.0	44.0	52.5	0.8/1.0
10	57.0	55.0	45.0	52.5	0.8/1.0

R.V.	440/480 VAC				
Cap (μF)	W ±1.0	H ±1.0	B ±1.0	P	dØ ±0.05
0.001~0.0056	10.0	9.0	4.0	7.5	0.6
0.0068~0.01	10.5	11.0	5.0	7.5	0.6
0.012~0.015	10.5	12.0	6.0	7.5	0.6
0.001~0.022	13.0	11.0	5.0	10.0	0.6
0.027~0.033	13.0	12.0	6.0	10.0	0.6
0.039~0.047	13.0	13.0	7.0	10.0	0.6
0.056	13.0	14.0	8.0	10.0	0.6
0.001~0.033	18.0	11.0	5.0	15.0	0.8
0.039~0.056	18.0	12.0	6.0	15.0	0.8
0.056	18.0	13.5	6.0	15.0	0.8
0.068~0.1	17.0	15.5	7.5	15.0	0.8
0.1	18.0	14.5	8.5	15.0	0.8
0.12~0.15	17.0	16.5	9.5	15.0	0.8
0.15~0.18	17.0	19.0	11.0	15.0	0.8
0.039~0.12	25.0	14.5	6.0	22.5	0.8
0.15	26.5	16.5	7.0	22.5	0.8
0.18~0.22	26.5	17.5	8.5	22.5	0.8
0.27	26.5	19.0	10.0	22.5	0.8
0.33~0.39	26.0	20.0	11.0	22.5	0.8
0.47	26.0	21.5	12.0	22.5	0.8
0.47~0.56	25.0	23.5	14.0	22.5	0.8
0.56~0.68	26.0	25.0	15.0	22.5	0.8
0.15~0.18	31.5	16.5	7.5	27.5	0.8
0.22~0.27	32.0	18.0	9.0	27.5	0.8
0.33	32.0	12.0	18.0	27.5	0.8
0.33~0.47	31.5	20.0	11.0	27.5	0.8
0.47	32.0	22.0	12.0	27.5	0.8
0.56~0.68	31.5	22.5	13.0	27.5	0.8

R.V.	440/480 VAC				
Cap (μF)	W ±1.0	H ±1.0	B ±1.0	P	dØ ±0.05
0.6~0.82	31.5	25.0	14.0	27.5	0.8
0.68	32.0	16.0	22.0	27.5	0.8
0.82~1.2	32.0	28.0	14.0	27.5	0.8
1.0	32.0	16.0	27.5	27.5	0.8
1.0~1.5	32.0	18.5	31.0	27.5	0.8
1.2~1.5	32.0	29.0	19.0	27.5	0.8
1.5	31.0	31.0	22.0	27.5	0.8
1.8~2.2	32.0	37.0	22.0	27.5	0.8
0.33~0.82	37.0	24.0	13.5	32.5	0.8
0.8~1.0	37.0	26.5	16.0	32.5	0.8
1.0~1.2	37.0	28.5	18.0	32.5	0.8
1.2~1.5	35.5	31.0	20.0	32.5	0.8
1.5~2.2	37.0	34.0	22.0	32.5	0.8
0.3~0.82	41.0	22.0	11.0	37.5	0.8/1.0
0.82~1.0	41.0	26.0	12.0	37.5	0.8/1.0
1.0	42.0	15.0	24.0	37.5	0.8/1.0
1.2~1.5	41.0	26.0	15.0	37.5	0.8/1.0
1.2~1.5	41.0	28.0	14.0	37.5	0.8/1.0
1.5	42.0	19.0	24.0	37.5	0.8/1.0
1.5~1.8	41.0	30.0	16.0	37.5	0.8/1.0
1.8~2.2	41.0	32.0	17.0	37.5	0.8/1.0
2.2	41.0	33.5	19.5	37.5	0.8/1.0
2.7~3.3	41.0	37.0	22.0	37.5	0.8/1.0
3.3	41.5	41.0	27.5	37.5	0.8/1.0
3.9~4.7	41.0	43.0	28.0	37.5	0.8/1.0
4.7	42.0	45.0	30.0	37.5	0.8/1.0
4.4~5.6	51.0	43.5	29.0	47.5	0.8/1.0
6.8~8.2	51.0	49.5	35.0	47.5	0.8/1.0

R.V.	440/480 VAC				
Cap (μF)	W ±1.0	H ±1.0	B ±1.0	P	dØ ±0.05
4.4~5.6	57.0	38.0	24.0	52.5	0.8/1.0
5.6~6.8	57.0	45.0	30.0	52.5	0.8/1.0
6.8~10.0	57.0	50.0	35.0	52.5	0.8/1.0
6.8	57.0	30.0	44.0	52.5	0.8/1.0
10	57.0	55.0	45.0	52.5	0.8/1.0

應用 Application :

- 跨線、EMI 濾波器

  Across the line、EMI Filter

- 天線耦合

  Antenna coupling

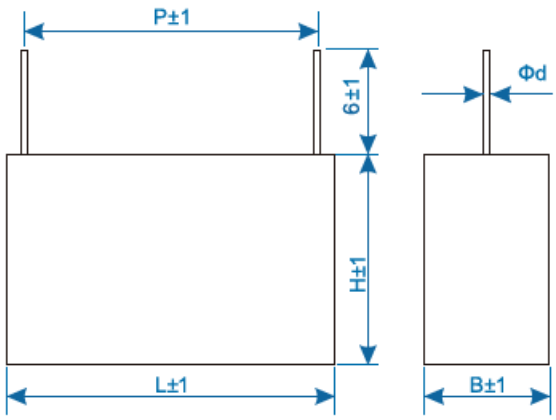

電氣特性 ELECTRICAL CHARACTERISTICS :

引用標準 Related Documents	UL 60384, CSA E60384-14, EN 60384-14:2013 (ed.4), IEC 60384 –14:2005
國際認證 Approval Marks	UL/CL- E209251, ENEC-SE-ENEC-2002177R1, CQC-CQC13001099626
額定電壓 Rated Voltage	250,275,300,310,330,350,400,440,480,500 VAC
最大運行溫度 Maximum Operating Temperature	– 40°C ~ + 110°C (– 40°C ~ + 110°C for which the capacitor can be operated continuously at rated voltage.)
容量範圍 Capacitance Range	0.00047μF ~ 0.1 μF
容量誤差 Capacitance Tolerance	± 5% (J), ± 10% (K)
絕緣電阻 Insulation Resistance	≥15,000Mohm
耐壓 Withstand Voltage	[Between Terminal] Nothing abnormal shall be found, Apply 2,000V (AC) for 2 sec or 4,000V (DC) for 2 sec. [Between Terminals &Enclosure] Nothing abnormal shall be found, Apply 2*Ur+1,500VAC for 2 to 5 sec. Min. 2,000VAC
損耗角 Dissipation Factor	≤ 0.001(0.1%) at 1 KHz

R.V.	250/275/300 VAC				
Cap (μF)	W ±1.0	H ±1.0	T ±1.0	P	dØ ±0.05
0.00047~0.0015	18.0	11.0	5.0	15.0	0.8
0.0018~0.0025	18.0	12.0	6.0	15.0	0.8
0.0027~0.0047	18.0	13.5	7.5	15.0	0.8
0.005~0.0056	18.0	14.5	8.5	15.0	0.8
0.01	18.0	16.0	10.0	15.0	0.8
0.0082~0.01	18.0	19.0	11.0	15.0	0.8
0.01	25.0	14.5	6.0	22.5	0.8
0.01	26.5	16.5	7.0	22.5	0.8
0.0082~0.01	26.5	17.0	8.5	22.5	0.8
0.012~0.015	26.0	18.5	10.0	22.5	0.8
0.018~0.022	26.5	20.0	11.0	22.5	0.8
0.02	26.0	22.0	12.0	22.5	0.8
0.027~0.033	31.5	22.5	13.0	27.5	0.8
0.047~0.056	32.0	28.0	14.0	27.5	0.8
0.07	31.5	28.0	18.0	27.5	0.8
0.08	31.0	31.0	22.0	27.5	0.8
0.1(M)	31.0	31.0	22.0	27.5	0.8
0.1	31.0	34.5	21.0	27.5	0.8
0.1	32.0	37.0	22.0	27.5	0.8

R.V.	500 VAC				
Cap (μF)	W ±1.0	H ±1.0	T ±1.0	P	dØ ±0.05
0.00047~0.0027	10.0	9.0	4.0	7.5	0.6
0.0027~0.0056	10.5	11.0	5.0	7.5	0.6
0.00047~0.0056	13.0	11.0	5.0	10.0	0.6
0.0068~0.0082	13.0	12.0	6.0	10.0	0.6
0.00047~0.018	18.0	11.0	5.0	15.0	0.6
0.022	17.5	11.0	5.5	15.0	0.6
0.033~0.068(M)	25.0	14.5	6.0	22.5	0.8
0.068~0.1	26.5	16.5	7.0	22.5	0.8
0.12	16.0	17.0	8.5	22.5	0.8
0.15	26.5	19.0	10.0	22.5	0.8
0.18	26.0	20.0	11.0	22.5	0.8
0.22	26.0	22.0	12.0	22.5	0.8
0.27	26.5	23.0	13.0	22.5	0.8
0.33~0.39	26.0	25.0	15.0	22.5	0.8
0.10	31.5	16.5	7.5	27.5	0.8
0.12~.15	31.0	18.0	9.0	27.5	0.8
0.18	31.4	19.5	10.8	27.5	0.8
0.22	30.0	21.0	11.8	27.5	0.8
0.27	31.4	19.5	10.8	27.5	0.8
0.27~0.33	31.5	21.6	13.0	27.5	0.8
0.33~0.47(M)	31.0	25.0	14.0	27.5	0.8
0.47	32.0	30.0	15.0	27.5	0.8
0.56	32.0	28.0	18.0	27.5	0.8
0.68(M)~0.82(M)	31.0	33.0	18.0	27.5	0.8
0.82~1.0	32.0	37.0	22.0	27.5	0.8
0.33~0.39	36.0	24.0	13.5	32.5	0.8
0.47	37.0	26.5	16.0	32.5	0.8
0.56~0.68	37.0	28.0	18.0	32.5	0.8
0.68	35.5	31.0	20.0	32.5	0.8
0.84~1.0	37.0	33.5	22.0	32.5	0.8
0.33~0.39(M)	42.0	22.0	12.0	37.5	1.0

R.V.	500 VAC				
Cap (μF)	W ±1.0	H ±1.0	T ±1.0	P	dØ ±0.05
0.39~0.47(M)	41.0	24.0	13.0	37.5	1.0
0.47	42.0	22.0	12.0	37.5	1.0
0.56~0.68(M)	41.0	28.5	16.0	37.5	1.0
0.68~1.0	41.5	30.0	17.0	37.5	1.0
1.00	41.5	34.0	20.5	37.5	1.0
1.20	41.5	35.5	22.5	37.5	1.0
1.50	41.5	41.0	27.5	37.5	1.0
1.8~2.0	41.5	45.0	30.0	37.5	1.0

應用 Application :

- 跨線、EMI 濾波器

  Across the line、EMI Filter

- 天線耦合

  Antenna coupling

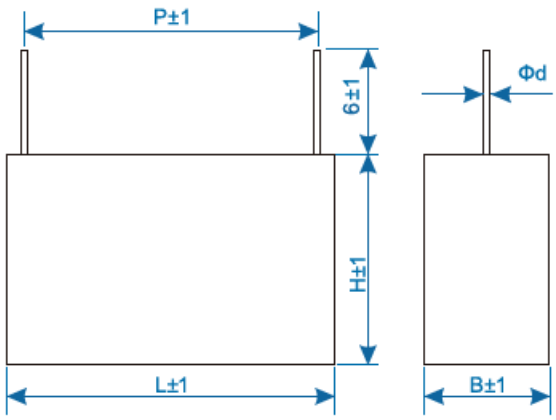

電氣特性 ELECTRICAL CHARACTERISTICS :

引用標準 Related Documents	UL 60384, CSA E60384-14, EN 60384-14:2013 (ed.4), IEC 60384 –14:2005
國際認證 Approval Marks	UL/CL- E209251, ENEC-SE-ENEC-2002177R1, CQC-CQC13001099626
額定電壓 Rated Voltage	250, 275, 300, 500 VAC
最大運行溫度 Maximum Operating Temperature	– 40°C ~ + 110°C (– 40°C ~ + 110°C for which the capacitor can be operated continuously at rated voltage.)
容量範圍 Capacitance Range	0.00047μF ~ 4.7 μF
容量誤差 Capacitance Tolerance	± 5% (J), ± 10% (K)
絕緣電阻 Insulation Resistance	≥15,000Mohm
耐壓 Withstand Voltage	[Between Terminal] Nothing abnormal shall be found, Apply 2,000V (AC) for 2 sec or 4,000V (DC) for 2 sec. [Between Terminals &Enclosure] Nothing abnormal shall be found, Apply 2*Ur+1,500VAC for 2 to 5 sec. Min. 2,000VAC
損耗角 Dissipation Factor	≤ 0.001(0.1%) at 1 KHz

R.V.	250/275/300 VAC				
Cap (μF)	W ±1.0	H ±1.0	B ±1.0	P	dØ ±0.05
0.00047~0.0047	10.5	9.0	4.0	7.5	0.8
0.0022~0.01	10.5	11.0	5.0	7.5	0.8
0.00047~0.0056	13.0	11.0	5.0	10	0.8
0.0068~0.012	13.0	12.0	6.0	10	0.8
0.02	13.0	13.0	7.0	10	0.8
0.027~0.033	13.0	14.0	8.0	10	0.8
0.00047~0.018	18.0	11.0	5.0	15	0.8
0.0022~0.01	17.5	9.5	5.0	15	0.8
0.025~0.033	18.0	12.0	6.0	15	0.8
0.039~0.047	18.0	13.5	6.0	15	0.8
0.056~0.068	17.0	15.5	7.5	15	0.8
0.082~0.1	17.0	16.5	9.5	15	0.8
0.022~0.027	17.0	11.0	5.5	15	0.8
0.025~0.033	18.0	12.0	6.0	15	0.8
0.039~0.047	18.0	13.5	6.0	15	0.8
0.056~0.068	17.0	15.5	7.5	15	0.8
0.082~0.1	17.0	16.5	9.5	15	0.8
0.033~0.068	25.0	14.5	6.0	22.5	0.8
0.068~0.1	26.5	16.5	7.0	22.5	0.8
0.1	26.5	29.5	14.5	22.5	0.8
0.12	26.5	17.0	8.5	22.5	0.8
0.15	26.5	19.0	10.0	22.5	0.8
0.18	26.0	20.0	11.0	22.5	0.8
0.22	26.5	21.5	12.0	22.5	0.8
0.27	26.5	22.5	12.5	22.5	0.8
0.33~0.39	26.0	25.0	15.0	22.5	0.8
0.33~0.39	26.5	29.5	14.5	22.5	0.8
0.1	31.5	16.5	7.5	27.5	0.8

R.V.	250/275/300 VAC				
Cap (μF)	W ±1.0	H ±1.0	B ±1.0	P	dØ ±0.05
0.12~0.15	31.0	18.0	9.0	27.5	0.8
0.15~0.24	32.0	12.0	18.0	27.5	0.8
0.18~0.27	31.5	20.0	11.0	27.5	0.8
0.24	30.0	21.0	12.0	27.5	0.8
0.33	31.5	22.5	13.0	27.5	0.8
0.33~0.47	31.5	25.0	14.0	27.5	0.8
0.33~0.39	31.0	24.5	15.0	27.5	0.8
0.33	32.0	12.0	22.0	27.5	0.8
0.39~0.47	32.0	28.0	14.0	27.5	0.8
0.47~0.68	32.0	28.0	18.0	27.5	0.8
0.47	32.0	16.0	27.5	27.5	0.8
0.47~0.56	32.0	30.0	15.0	27.5	0.8
0.68	32.0	30.0	21.0	27.5	0.8
0.68	31.5	33.0	18.0	27.5	0.8
0.68~0.82	32.0	18.5	31.0	27.5	0.8
0.82	31.5	33.0	18.0	27.5	0.8
0.82~1.0	32.0	37.0	22.0	27.5	0.8
1	37.0	34.0	22.0	32.5	0.8
0.33~0.47	37.0	24.0	13.5	32.5	0.8
0.56~0.68	37.0	26.5	16.0	32.5	0.8
0.56~0.68	37.0	28.5	18.0	32.5	0.8
0.68~0.82	35.5	31.0	20.0	32.5	0.8
0.82	37.0	34.0	22.0	32.5	0.8
0.33	41.5	22.0	12.0	37.5	0.8
0.39	41.0	24.0	13.0	37.5	0.8/1.0
0.47~0.68	41.5	26.0	14.5	37.5	0.8/1.0
0.47~0.82	42.0	15.0	24.0	37.5	0.8/1.0
0.56~0.68	42.0	28.0	14.0	37.5	0.8/1.0

R.V.	250/275/300 VAC				
Cap (μF)	W ±1.0	H ±1.0	B ±1.0	P	dØ ±0.05
0.68~1.0	41.5	30.0	17.0	37.5	0.8/1.0
0.82	42.0	19.0	24.0	37.5	0.8/1.0
1	41.5	32.0	19.0	37.5	0.8/1.0
1	41.5	34.0	20.5	37.5	0.8/1.0
1.0~1.2	41.5	35.5	22.5	37.5	0.8/1.0
1	41.0	37.0	22.0	37.5	0.8/1.0
1.5	41.5	41.0	27.5	37.5	0.8/1.0
1.8	41.5	43.0	28.0	37.5	0.8/1.0
1.8~2.0	41.5	45.0	30.0	37.5	0.8/1.0
3.9	41.5	26.0	14.5	37.5	0.8/1.0
1	51.0	27.5	17.5	47.5	0.8/1.0
1.0~1.2	51.0	30.5	20.0	47.5	0.8/1.0
1.2~1.5	51.0	34.0	22.0	47.5	0.8/1.0
1.5~1.8	51.0	35.0	24.0	47.5	0.8/1.0
1.8	51.0	43.5	29.0	47.5	0.8/1.0
1.5~1.8	58.0	30.0	20.5	51.5	0.8/1.0
1.8~2.0	58.0	35.0	23.0	51.5	0.8/1.0
2.2	58.0	38.0	25.0	51.5	0.8/1.0
2.5~3.3	57.0	45.0	30.0	51.5	0.8/1.0
3.3	57.0	30.0	44.0	51.5	0.8/1.0
3.9~4.7	57.0	50.0	35.0	51.5	0.8/1.0
4.7	57.0	50.0	35.0	51.5	0.8/1.0
4.7	58.0	56.5	43.0	51.5	0.8/1.0
4.7	58.0	55.0	45.0	51.5	0.8/1.0

R.V.	500 VAC				
Cap (μF)	W ±1.0	H ±1.0	B ±1.0	P	dØ ±0.05
0.00047~0.0027	10.5	9.0	4.0	7.5	0.6
0.0022~0.0056	10.5	11.0	5.0	7.5	0.6
0.00047~0.0056	13.0	11.0	5.0	10.0	0.6
0.001~0.0039	13.0	9.0	4.0	10.0	0.6
0.0068~0.012	13.0	12.0	6.0	10.0	0.6
0.02	13.0	13.0	7.0	10.0	0.6
0.027~0.033	13.0	14.0	8.0	10.0	0.6
0.00047~0.0039	18.0	11.0	5.0	15.0	0.8
0.0022~0.01	17.5	9.5	5.0	15.0	0.8
0.025~0.033	18.0	12.0	6.0	15.0	0.8
0.039~0.047	18.0	13.5	6.0	15.0	0.8
0.056~0.068	17.0	15.5	7.5	15.0	0.8
0.082~0.1	17.0	16.5	9.5	15.0	0.8
0.033~0.068	25.0	14.5	6.0	22.5	0.8
0.068~0.1	26.5	16.5	7.0	22.5	0.8
0.10	26.5	29.5	14.5	22.5	0.8
0.12	26.5	17.0	8.5	22.5	0.8
0.15	26.5	19.0	10.0	22.5	0.8
0.18	26.0	20.0	11.0	22.5	0.8
0.22	26.5	21.5	12.0	22.5	0.8
0.27	26.5	22.5	12.5	22.5	0.8
0.33~0.39	26.0	25.0	15.0	22.5	0.8
0.33~0.39	26.5	29.5	14.5	22.5	0.8
0.10	31.5	16.5	7.5	27.5	0.8
0.12~0.15	31.0	18.0	9.0	27.5	0.8
0.15~0.24	32.0	12.0	18.0	27.5	0.8
0.18~0.27	31.5	20.0	11.0	27.5	0.8
0.24	30.0	21.0	12.0	27.5	0.8

R.V.	500 VAC				
Cap (μF)	W ±1.0	H ±1.0	B ±1.0	P	dØ ±0.05
0.27~0.33	31.5	22.5	13.0	27.5	0.8
0.33	31.5	25.0	14.0	27.5	0.8
0.33~0.47	31.0	24.5	15.0	27.5	0.8
0.33	32.0	12.0	22.0	27.5	0.8
0.39~0.47	32.0	28.0	14.0	27.5	0.8
0.47~0.68	32.0	28.0	18.0	27.5	0.8
0.47	32.0	16.0	27.5	27.5	0.8
0.47~0.56	32.0	30.0	15.0	27.5	0.8
0.68	32.0	30.0	21.0	27.5	0.8
0.68	31.5	33.0	18.0	27.5	0.8
0.68~0.82	32.0	18.5	31.0	27.5	0.8
0.68~0.82	31.5	33.0	18.0	27.5	0.8
0.82~1.0	32.0	37.0	22.0	27.5	0.8
1	37.0	34.0	22.0	32.5	0.8
0.33~0.47	37.0	24.0	13.5	32.5	0.8
0.47~0.68	37.0	26.5	16.0	32.5	0.8
0.56~0.68	37.0	28.5	18.0	32.5	0.8
0.68~0.82	35.5	31.0	20.0	32.5	0.8
0.82	37.0	34.0	22.0	32.5	0.8
0.33	41.5	22.0	12.0	37.5	0.8/1.0
0.39~0.47	41.0	24.0	13.0	37.5	0.8/1.0
0.47~0.68	41.5	26.0	14.5	37.5	0.8/1.0
0.47~0.82	42.0	15.0	24.0	37.5	0.8/1.0
0.56~0.68	42.0	28.0	14.0	37.5	0.8/1.0
0.68~1.0	41.5	30.0	17.0	37.5	0.8/1.0
0.82	42.0	19.0	24.0	37.5	0.8/1.0
1	41.5	32.0	19.0	37.5	0.8/1.0
1	41.5	34.0	20.5	37.5	0.8/1.0

R.V.	500 VAC				
Cap (μF)	W ±1.0	H ±1.0	B ±1.0	P	dØ ±0.05
1.0~1.2	41.5	35.5	22.5	37.5	0.8/1.0
1	41.0	37.0	22.0	37.5	0.8/1.0
1.5	41.5	41.0	27.5	37.5	0.8/1.0
1.8	41.5	43.0	28.0	37.5	0.8/1.0
1.8~2.0	41.5	45.0	30.0	37.5	0.8/1.0
3.9	41.5	26.0	14.5	37.5	0.8/1.0
1	51.0	27.5	17.5	47.5	0.8/1.0
1.0~1.2	51.0	30.5	20.0	47.5	0.8/1.0
1.2~1.5	51.0	34.0	22.0	47.5	0.8/1.0
1.5~1.8	51.0	35.0	24.0	47.5	0.8/1.0
1.8	51.0	43.5	29.0	47.5	0.8/1.0
1.5~1.8	58.0	30.0	20.5	51.5	0.8/1.0
1.8~2.0	58.0	35.0	23.0	51.5	0.8/1.0
2.2	58.0	38.0	25.0	51.5	0.8/1.0
2.5~3.3	57.0	45.0	30.0	51.5	0.8/1.0
3.3	57.0	30.0	44.0	51.5	0.8/1.0
3.9~4.7	57.0	50.0	35.0	51.5	0.8/1.0
4.7	57.0	50.0	35.0	51.5	0.8/1.0
4.7	58.0	56.5	43.0	51.5	0.8/1.0
4.7	58.0	55.0	45.0	51.5	0.8/1.0

應用 Application :

- 跨線、EMI 濾波器

  Across the line、EMI Filter

- 儲能設備濾波方案

  Energy storage device filtering

- 直流電流濾波

  DC current filtering

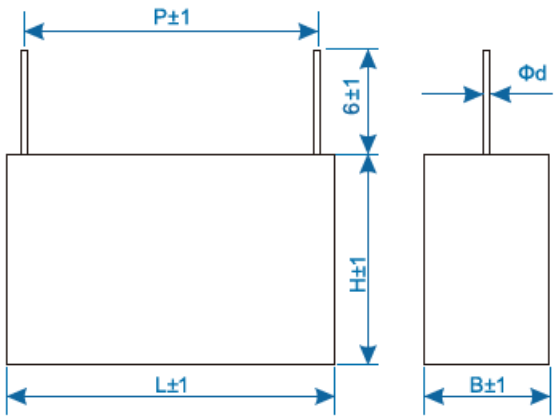

電氣特性 ELECTRICAL CHARACTERISTICS :

引用標準 Related Documents	UL 60384, CSA E60384-14, EN 60384-14:2013 (ed.4), IEC 60384 –14:2013
國際認證 Approval Marks	UL/CL- E209251, ENEC-SE-ENEC-2002177R1, CQC-CQC13001099627
額定電壓 Rated Voltage(VDC)	1500 VDC
額定電壓 Rated Voltage(VAC)	760 VAC
最大運行溫度 Maximum Operating Temperature	– 40°C ~ + 110°C (– 40°C ~ + 110°C for which the capacitor can be operated continuously at rated voltage.)
容量範圍 Capacitance Range	0.001μF ~ 10 μF
容量誤差 Capacitance Tolerance	± 5% (J), ± 10% (K)
絕緣電阻 Insulation Resistance	≥15,000 Mohm (C≤0.33uf), ≥5,000 Mohm*uF/C (C>0.33uf)
耐壓 Withstand Voltage	[Between Terminal] Nothing abnormal shall be found, Apply Ur*2.15 (DC) for 60 sec [Between Terminals &Enclosure] Nothing abnormal shall be found, Min. 2,000VAC
損耗角 Dissipation Factor	≤ 0.001(0.1%) at 1 KHz

R.V.	1500 VDC				
Cap (μF)	W ±1.0	H ±1.0	B ±1.0	P	dØ ±0.05
0.001~0.018	10.0	9.0	4.0	7.5	0.6
0.0068~0.047	10.5	11.0	5.0	7.5	0.6
0.001~0.047	13.0	11.0	5.0	10.0	0.6
0.027~0.15	13.0	12.0	6.0	10.0	0.6
0.039~0.047	13.0	13.0	7.0	10.0	0.6
0.056~0.15	13.0	14.0	8.0	10.0	0.6
0.001~0.056	18.0	11.0	5.0	15.0	0.8
0.039~0.12	18.0	12.0	6.0	15.0	0.8
0.056~0.15	18.0	13.5	6.0	15.0	0.8
0.068~0.1	17.0	11.0	5.5	15.0	0.8
0.068~0.22	17.0	15.5	7.5	15.0	0.8
0.12~0.33	17.0	16.5	9.5	15.0	0.8
0.15~0.47	17.0	19.0	11.0	15.0	0.8
0.56~0.68	17.0	21.0	12.0	15.0	0.8
0.1	18.0	14.5	8.5	15.0	0.8
0.039~0.22	25.0	14.5	6.0	22.5	0.8
0.15~0.33	26.5	16.5	7.0	22.5	0.8
0.27~0.68	26.5	19.0	10.0	22.5	0.8
0.33~0.82	26.0	20.0	11.0	22.5	0.8
0.39~0.47	26.5	17.0	8.5	22.5	0.8
0.47~0.56	25.0	23.5	14.0	22.5	0.8
0.52~0.56	25.0	19.0	8.5	22.5	0.8
0.56~0.68	26.0	25.0	15.0	22.5	0.8
0.47~1.0	26.0	21.5	12.0	22.5	0.8
0.15~0.47	31.5	16.5	7.5	27.5	0.8
0.33~0.82	31.5	20.0	11.0	27.5	0.8
0.56~1.0	31.5	22.5	13.0	27.5	0.8
0.6~1.8	31.5	25.0	14.0	27.5	0.8

R.V.	1500 VDC				
Cap (μF)	W ±1.0	H ±1.0	B ±1.0	P	dØ ±0.05
0.33	32.0	12.0	18.0	27.50	0.8
0.47	32.0	12.0	22.0	27.50	0.8
0.68~1.0	32.0	16.0	22.0	27.50	0.8
0.82	32.0	28.0	14.0	27.50	0.8
1	30.0	21.0	11.5	27.50	0.8
1.0~1.5	32.0	18.5	31.0	27.50	0.8
1.0~2.2	32.0	28.0	18.0	27.50	0.8
1.2~1.5	32.0	29.0	19.0	27.50	0.8
1.5~2.7	31.0	31.0	22.0	27.50	0.8
1.8~2.2	32.0	37.0	22.0	27.50	0.8
0.33~1.5	37.0	24.0	13.5	32.50	0.8
1.0~2.2	37.0	26.5	16.0	32.50	0.8
1.0~2.7	37.0	28.5	18.0	32.50	0.8
1.2~3.3	35.5	31.0	20.0	32.50	0.8
1.5~2.2	37.0	34.0	22.0	32.50	0.8
0.3~0.82	41.0	22.0	11.0	37.50	0.8/1.0
0.82~2.2	41.0	26.0	12.0	37.50	0.8/1.0
1	42.0	15.0	24.0	37.50	0.8/1.0
1.2~2.7	41.0	28.0	14.0	37.50	0.8/1.0
1.5~1.8	41.0	30.0	16.0	37.50	0.8/1.0
1.8~3.9	41.0	32.0	17.0	37.50	0.8/1.0
2.7~6.8	41.0	37.0	22.0	37.50	0.8/1.0
3.9~10.0	41.0	43.0	28.0	37.50	0.8/1.0
1.5	42.0	19.0	24.0	37.50	0.8/1.0
4.7	42.0	45.0	30.0	37.50	0.8/1.0
8.2	41.5	41.0	27.5	37.50	0.8/1.0
3.3~3.9	51.0	27.5	17.5	47.50	0.8/1.0
4.4~4.7	51.0	30.5	20.0	47.50	0.8/1.0

R.V.	1500 VDC				
Cap (μF)	W ±1.0	H ±1.0	B ±1.0	P	dØ ±0.05
4.4~10	51.0	43.5	29.0	47.50	0.8/1.0
5.6~6.8	51.0	34.0	22.0	47.50	0.8/1.0
6.8~10	51.0	49.5	35.0	47.50	0.8/1.0
4.4~5.6	57.0	38.0	24.0	52.50	0.8/1.0
5.6~6.8	57.0	45.0	30.0	52.50	0.8/1.0
6.8~8.2	57.0	50.0	35.0	52.50	0.8/1.0
6.8	57.0	30.0	44.0	52.50	0.8/1.0
10	57.0	55.0	45.0	52.50	0.8/1.0

應用 Application :

- 跨線、EMI 濾波器

  Across the line、EMI Filter

- 天線耦合

  Antenna coupling

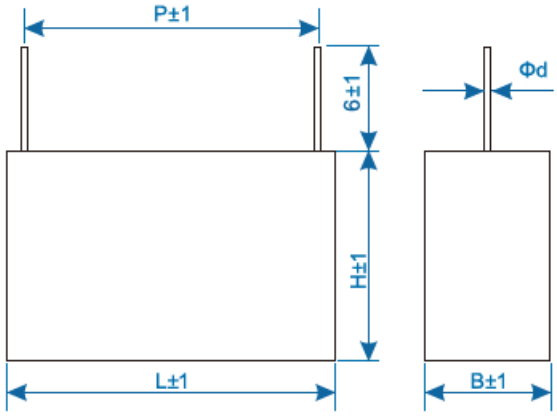

電氣特性 ELECTRICAL CHARACTERISTICS :

引用標準 Related Documents	UL 60384, CSA E60384-14, EN 60384-14:2013 (ed.4), IEC 60384 –14:2013
國際認證 Approval Marks	UL/CL- E209251, ENEC-SE-ENEC-2002177R1, CQC-CQC13001099626
額定電壓 Rated Voltage	1500 VDC
最大運行溫度 Maximum Operating Temperature	– 40°C ~ + 110°C (– 40°C ~ + 110°C for which the capacitor can be operated continuously at rated voltage.)
容量範圍 Capacitance Range	0.00047μF ~ 4.7 μF
容量誤差 Capacitance Tolerance	± 5% (J), ± 10% (K)
絕緣電阻 Insulation Resistance	IR≥15,000 Mohm (C≤0.33uF), IR≥5,000 Mohm*uF/C (C>0.33uf)
耐壓 Withstand Voltage	[Between Terminal] Nothing abnormal shall be found, Apply 2,000V (AC) for 2 sec or 4,000V (DC) for 2 sec. [Between Terminals &Enclosure] Nothing abnormal shall be found, Min. 2,000VAC
損耗角 Dissipation Factor	≤ 0.001(0.1%) at 1 KHz

R.V.	1500 VDC				
Cap (μF)	W ±1.0	H ±1.0	B ±1.0	P	dØ ±0.05
0.00047~0.0047	10.5	9.0	4.0	7.5	0.6
0.0022~0.01	10.5	11.0	5.0	7.5	0.6
0.00047~0.0056	13.0	11.0	5.0	10.0	0.6
0.0068~0.012	13.0	12.0	6.0	10.0	0.6
0.02	13.0	13.0	7.0	10.0	0.6
0.027~0.033	13.0	14.0	8.0	10.0	0.6
0.00047~0.018	18.0	11.0	5.0	15.0	0.8
0.0022~0.01	17.5	9.5	5.0	15.0	0.8
0.025~0.033	18.0	12.0	6.0	15.0	0.8
0.039~0.047	18.0	13.5	6.0	15.0	0.8
0.056~0.068	17.0	15.5	7.5	15.0	0.8
0.082~0.1	17.0	16.5	9.5	15.0	0.8
0.022~0.027	17.0	11.0	5.5	15.0	0.8
0.025~0.033	18.0	12.0	6.0	15.0	0.8
0.039~0.047	18.0	13.5	6.0	15.0	0.8
0.056~0.068	17.0	15.5	7.5	15.0	0.8
0.082~0.1	17.0	16.5	9.5	15.0	0.8
0.033~0.068	25.0	14.5	6.0	22.5	0.8
0.068~0.1	26.5	16.5	7.0	22.5	0.8
0.1	26.5	29.5	14.5	22.5	0.8
0.12	26.5	17.0	8.5	22.5	0.8
0.15	26.5	19.0	10.0	22.5	0.8
0.18	26.0	20.0	11.0	22.5	0.8
0.22	26.5	21.5	12.0	22.5	0.8
0.27	26.5	22.5	12.5	22.5	0.8
0.33~0.39	26.0	25.0	15.0	22.5	0.8
0.33~0.39	26.5	29.5	14.5	22.5	0.8
0.1	31.5	16.5	7.5	27.5	0.8

R.V.	1500 VDC				
Cap (μF)	W ±1.0	H ±1.0	B ±1.0	P	dØ ±0.05
0.12~0.15	31.0	18.0	9.0	27.5	0.8
0.15~0.24	32.0	12.0	18.0	27.5	0.8
0.18~0.27	31.5	20.0	11.0	27.5	0.8
0.24	30.0	21.0	12.0	27.5	0.8
0.33	31.5	22.5	13.0	27.5	0.8
0.33~0.47	31.5	25.0	14.0	27.5	0.8
0.33~0.39	31.0	24.5	15.0	27.5	0.8
0.33	32.0	12.0	22.0	27.5	0.8
0.39~0.47	32.0	28.0	14.0	27.5	0.8
0.47~0.68	32.0	28.0	18.0	27.5	0.8
0.47	32.0	16.0	27.5	27.5	0.8
0.47~0.56	32.0	30.0	15.0	27.5	0.8
0.68	32.0	30.0	21.0	27.5	0.8
0.68	31.5	33.0	18.0	27.5	0.8
0.68~0.82	32.0	18.5	31.0	27.5	0.8
0.82	31.5	33.0	18.0	27.5	0.8
0.82~1.0	32.0	37.0	22.0	27.5	0.8
1	37.0	34.0	22.0	32.5	0.8
0.33~0.47	37.0	24.0	13.5	32.5	0.8
0.56~0.68	37.0	26.5	16.0	32.5	0.8
0.56~0.68	37.0	28.5	18.0	32.5	0.8
0.68~0.82	35.5	31.0	20.0	32.5	0.8
0.82	37.0	34.0	22.0	32.5	0.8
0.33	41.5	22.0	12.0	37.5	0.8/1.0
0.39	41.0	24.0	13.0	37.5	0.8/1.0
0.47~0.68	41.5	26.0	14.5	37.5	0.8/1.0
0.47~0.82	42.0	15.0	24.0	37.5	0.8/1.0
0.56~0.68	42.0	28.0	14.0	37.5	0.8/1.0

R.V.	1500 VDC				
Cap (μF)	W ±1.0	H ±1.0	B ±1.0	P	dØ ±0.05
0.68~1.0	41.5	30.0	17.0	37.5	0.8/1.0
0.82	42.0	19.0	24.0	37.5	0.8/1.0
1	41.5	32.0	19.0	37.5	0.8/1.0
1	41.5	34.0	20.5	37.5	0.8/1.0
1.0~1.2	41.5	35.5	22.5	37.5	0.8/1.0
1	41.0	37.0	22.0	37.5	0.8/1.0
1.5	41.5	41.0	27.5	37.5	0.8/1.0
1.8	41.5	43.0	28.0	37.5	0.8/1.0
1.8~2.0	41.5	45.0	30.0	37.5	0.8/1.0
3.9	41.5	26.0	14.5	37.5	0.8/1.0
1	51.0	27.5	17.5	47.5	0.8/1.0
1.0~1.2	51.0	30.5	20.0	47.5	0.8/1.0
1.2~1.5	51.0	34.0	22.0	47.5	0.8/1.0
1.5~1.8	51.0	35.0	24.0	47.5	0.8/1.0
1.8	51.0	43.5	29.0	47.5	0.8/1.0
1.5~1.8	58.0	30.0	20.5	51.5	0.8/1.0
1.8~2.0	58.0	35.0	23.0	51.5	0.8/1.0
2.2	58.0	38.0	25.0	51.5	0.8/1.0
2.5~3.3	57.0	45.0	30.0	51.5	0.8/1.0
3.3	57.0	30.0	44.0	51.5	0.8/1.0
3.9~4.7	57.0	50.0	35.0	51.5	0.8/1.0
4.7	57.0	50.0	35.0	51.5	0.8/1.0
4.7	58.0	56.5	43.0	51.5	0.8/1.0
4.7	58.0	55.0	45.0	51.5	0.8/1.0

特點 Feature :

- 低諧振

  Low resonance

- 高頻電流耐受

  High frequency current tolerance

應用 Application :

- 照明產品 & 開關電源電路

  Lighting products & Switching power supply circuits

- 用於高電流脈衝及高交流電壓

  For high current pulse and high ac voltage

- 諧振吸收運用

  Resonance absorption application

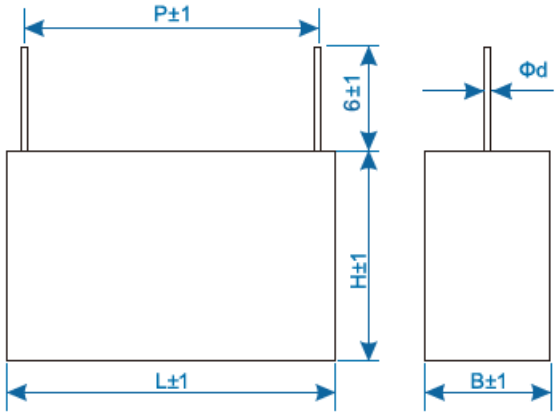

電氣特性 ELECTRICAL CHARACTERISTICS :

引用標準 Related Documents	IEC 60384 –17
額定電壓 Rated Voltage	800, 1200, 1600, 2000, 2200 VDC
最大運行溫度 Maximum Operating Temperature	– 40°C ~ + 105°C (+85°C to +105°C decreasing factor 1.5% per °C for Rated Voltage)
容量範圍 Capacitance Range	0.001μF ~ 0.1 μF
容量誤差 Capacitance Tolerance	± 2% (G), ± 3% (H), ± 5% (J), ± 10% (K)
絕緣電阻 Insulation Resistance	Terminal to Terminal: (at 20°C ±5°C), Voltage charge time: 1 minute. >=30,000 MΩ (C<=0.33uF), >=10,000 MΩ*uF/C (C>0.33uF)
耐壓 Withstand Voltage	Terminal to Terminal: (at 20°C±5°C) 1.6 × VR applied for 2sec. (cut off current 10mA)

R.V.	800 VDC				
Cap (μF)	W ±1.0	H ±1.0	T ±1.0	P	dØ ±0.05
0.01	18.0	11.0	5.0	15.0	0.8
0.012	18.0	11.0	5.0	15.0	0.8
0.015	18.0	11.0	5.0	15.0	0.8
0.018	18.0	12.0	6.0	15.0	0.8
0.022	18.0	13.5	7.5	15.0	0.8
0.027	18.0	13.5	7.5	15.0	0.8
0.033	18.0	13.5	7.5	15.0	0.8
0.039	18.0	14.5	8.5	15.0	0.8
0.047	18.0	16.5	10.0	15.0	0.8
0.056	18.0	16.5	10.0	15.0	0.8
0.056	26.0	16.5	7.0	22.5	0.8
0.068	26.0	16.5	7.0	22.5	0.8
0.082	26.0	17.0	8.5	22.5	0.8
0.1	26.0	19.0	10.0	22.5	0.8

R.V.	1200 VDC				
Cap (μF)	W ±1.0	H ±1.0	T ±1.0	P	dØ ±0.05
0.001	13.0	9.0	4.0	10.0	0.6
0.0012	13.0	9.0	4.0	10.0	0.6
0.0015	13.0	9.0	4.0	10.0	0.6
0.0018	13.0	11.0	5.0	10.0	0.6
0.0022	13.0	11.0	5.0	10.0	0.6
0.0027	13.0	11.0	5.0	10.0	0.6
0.0033	13.0	11.0	5.0	10.0	0.6
0.0039	13.0	12.0	6.0	10.0	0.6
0.0047	13.0	13.0	7.0	10.0	0.6
0.0056	13.0	13.0	7.0	10.0	0.6
0.0068	18.0	11.0	5.0	15.0	0.8
0.0082	18.0	11.0	5.0	15.0	0.8
0.01	18.0	12.0	6.0	15.0	0.8
0.012	18.0	12.0	6.0	15.0	0.8
0.015	18.0	13.5	7.5	15.0	0.8
0.018	18.0	13.5	7.5	15.0	0.8
0.022	18.0	14.5	8.5	15.0	0.8
0.027	18.0	16.5	10.0	15.0	0.8
0.033	26.0	16.5	7.0	22.5	0.8
0.039	26.0	16.5	7.0	22.5	0.8
0.047	26.0	17.0	8.5	22.5	0.8
0.056	26.0	19.0	10.0	22.5	0.8
0.068	26.0	19.0	10.0	22.5	0.8
0.082	26.0	19.0	10.0	22.5	0.8
0.1	26.0	20.0	11.0	22.5	0.8

R.V.	1600 VDC				
Cap (μF)	W ±1.0	H ±1.0	T ±1.0	P	dØ ±0.05
0.001	18.0	11.0	5.0	15.0	0.8
0.0012	18.0	11.0	5.0	15.0	0.8
0.0015	18.0	11.0	5.0	15.0	0.8
0.0018	18.0	11.0	5.0	15.0	0.8
0.0022	18.0	11.0	5.0	15.0	0.8
0.0027	18.0	11.0	5.0	15.0	0.8
0.0033	18.0	11.0	5.0	15.0	0.8
0.0039	18.0	11.0	5.0	15.0	0.8
0.0047	18.0	11.0	5.0	15.0	0.8
0.0056	18.0	12.0	6.0	15.0	0.8
0.0068	18.0	12.0	6.0	15.0	0.8
0.0082	18.0	13.5	7.5	15.0	0.8
0.01	18.0	13.5	7.5	15.0	0.8
0.012	18.0	14.5	8.5	15.0	0.8
0.015	18.0	15.0	9.0	15.0	0.8
0.018	26.0	15.0	6.0	22.5	0.8
0.022	26.0	16.5	7.0	22.5	0.8
0.027	26.0	17.0	8.5	22.5	0.8

R.V.	2000 VDC				
Cap (μF)	W ±1.0	H ±1.0	T ±1.0	P	dØ ±0.05
0.001	18.0	11.0	5.0	15.0	0.8
0.0012	18.0	11.0	5.0	15.0	0.8
0.0015	18.0	11.0	5.0	15.0	0.8
0.0018	18.0	11.0	5.0	15.0	0.8
0.0022	18.0	11.0	5.0	15.0	0.8
0.0027	18.0	12.0	6.0	15.0	0.8
0.0033	18.0	12.0	6.0	15.0	0.8
0.0039	18.0	13.5	7.5	15.0	0.8
0.0047	18.0	13.5	7.5	15.0	0.8
0.0056	18.0	14.5	8.5	15.0	0.8
0.0068	18.0	14.5	8.5	15.0	0.8
0.0082	26.0	15.0	6.0	22.5	0.8
0.01	26.0	16.5	7.0	22.5	0.8
0.012	26.0	16.5	7.0	22.5	0.8
0.015	26.0	17.0	8.5	22.5	0.8
0.018	26.0	19.0	10.0	22.5	0.8
0.022	26.0	19.0	10.0	22.5	0.8
0.027	26.0	20.0	11.0	22.5	0.8

R.V.	2200 VDC				
Cap (μF)	W ±1.0	H ±1.0	T ±1.0	P	dØ ±0.05
0.001	26.0	13.5	6.0	22.5	0.8
0.0012	26.0	13.5	6.0	22.5	0.8
0.0015	26.0	13.5	6.0	22.5	0.8
0.0018	26.0	13.5	6.0	22.5	0.8
0.0022	26.0	13.5	6.0	22.5	0.8
0.0027	26.0	13.5	6.0	22.5	0.8
0.0033	26.0	13.5	6.0	22.5	0.8
0.0039	26.0	13.5	6.0	22.5	0.8
0.0047	26.0	13.5	6.0	22.5	0.8

R.V.	2200 VDC				
Cap (μF)	W ±1.0	H ±1.0	T ±1.0	P	dØ ±0.05
0.006	26.0	13.5	6.0	22.5	0.8
0.0068	26.0	16.5	7.0	22.5	0.8
0.0082	26.0	16.5	7.0	22.5	0.8
0.0100	26.0	17.0	8.5	22.5	0.8
0.0120	26.0	19.0	10.0	22.5	0.8
0.0150	26.0	19.0	10.0	22.5	0.8
0.0180	26.0	20.0	10.0	22.5	0.8

特點 Feature :

- 高頻下低損耗

  Low Dissipation Factor at high frequency

- 高絕緣阻抗和脈沖強度

  High insulation resistance and pulse strength

應用 Application :

- 開關電源及電子整流器電路

  Switching power supply and Electronic ballast circuits

- 高脈衝、高頻率、高電流應用

  High frequency、High pulse、High current applications

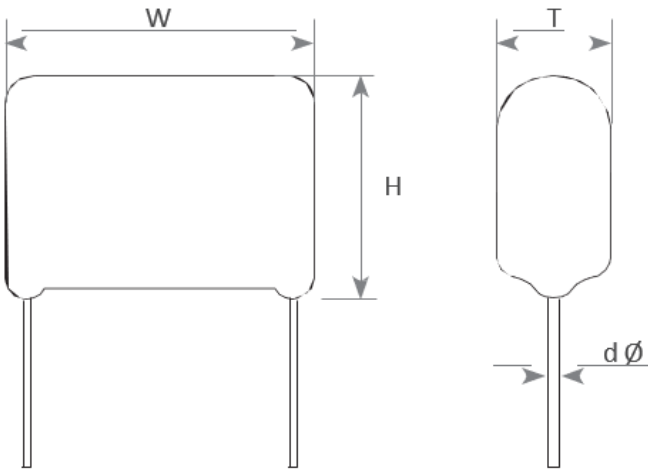

電氣特性 ELECTRICAL CHARACTERISTICS :

引用標準 Related Documents	IEC 60384 –13
額定電壓 Rated Voltage	800, 1000, 1200 VDC
最大運行溫度 Maximum Operating Temperature	– 40°C ~ + 110°C (+85°C to +110°C decreasing factor 1.5% per °C for Rated Voltage)
容量範圍 Capacitance Range	0.001μF ~ 0.1 μF
容量誤差 Capacitance Tolerance	± 5% (J), ± 10% (K)
絕緣電阻 Insulation Resistance	Terminal to Terminal: (at 20°C ±5°C), Voltage charge time: 1 minute. Voltage : 500VDC >=30,000 MOhm (C<=0.33uF), >=10,000 MOhm*uF/C (C>0.33uF)
耐壓 Withstand Voltage	Terminal to Terminal: (at 20°C±5°C) 1.6 × VR applied for 2sec. (cut off current 10mA)

R.V.	800 VDC				
Cap (μF)	W ±1.0	H ±1.0	T ±1.0	P	dØ ±0.05
0.01	18.0	10.5	5.5	15.0	0.8
0.012	18.0	11.0	5.5	15.0	0.8
0.015	18.0	11.0	5.5	15.0	0.8
0.018	18.0	11.5	6.0	15.0	0.8
0.022	18.0	12.0	6.5	15.0	0.8
0.027	18.0	14.0	7.0	15.0	0.8
0.033	18.0	14.5	7.5	15.0	0.8
0.036	18.0	15.0	8.0	15.0	0.8
0.039	18.0	15.5	8.5	15.0	0.8
0.043	18.0	16.0	9.0	15.0	0.8
0.047	18.0	16.5	9.5	15.0	0.8
0.047	20.5	15.5	8.0	17.5	0.8
0.056	20.5	16.0	9.0	17.5	0.8
0.068	20.5	17.0	10.0	17.5	0.8
0.082	20.5	18.0	11.5	17.5	0.8
0.033	23.0	13.5	6.0	20.0	0.8
0.036	23.0	13.5	6.5	20.0	0.8
0.039	23.0	13.5	6.5	20.0	0.8
0.043	23.0	14.0	7.0	20.0	0.8
0.047	23.0	14.5	7.5	20.0	0.8
0.056	23.0	15.5	8.0	20.0	0.8
0.068	23.0	18.0	8.0	20.0	0.8
0.082	23.0	19.0	9.0	20.0	0.8
0.1	23.0	20.0	10.0	20.0	0.8

R.V.	1000 VDC				
Cap (μF)	W ±1.0	H ±1.0	T ±1.0	P	dØ ±0.05
0.001	18.0	10.0	5.0	15.0	0.8
0.0012	18.0	10.0	5.0	15.0	0.8
0.0015	18.0	10.0	5.0	15.0	0.8
0.0018	18.0	10.0	5.5	15.0	0.8
0.0022	18.0	10.5	5.5	15.0	0.8
0.0027	18.0	10.5	5.5	15.0	0.8
0.003	18.0	10.5	5.5	15.0	0.8
0.0033	18.0	10.5	5.5	15.0	0.8
0.0036	18.0	10.5	5.5	15.0	0.8
0.0039	18.0	10.5	5.5	15.0	0.8
0.0047	18.0	10.5	5.5	15.0	0.8
0.0056	18.0	10.5	5.5	15.0	0.8
0.0068	18.0	10.5	5.5	15.0	0.8
0.0082	18.0	12.0	6.0	15.0	0.8
0.01	18.0	12.0	6.5	15.0	0.8
0.012	18.0	12.5	7.0	15.0	0.8
0.015	18.0	13.5	7.0	15.0	0.8
0.018	18.0	14.0	7.5	15.0	0.8
0.022	18.0	14.0	8.5	15.0	0.8
0.027	18.0	15.5	9.5	15.0	0.8
0.033	18.0	15.5	10.0	15.0	0.8
0.036	18.0	16.0	10.5	15.0	0.8
0.039	18.0	16.5	11.0	15.0	0.8
0.043	18.0	18.0	11.0	15.0	0.8
0.047	18.0	18.5	11.5	15.0	0.8
0.033	23.0	15.0	8.0	20.0	0.8
0.036	23.0	15.5	8.5	20.0	0.8
0.039	23.0	15.5	8.5	20.0	0.8
0.043	23.0	16.0	9.5	20.0	0.8
0.047	23.0	16.5	10.0	20.0	0.8
0.056	23.0	17.5	11.0	20.0	0.8
0.068	23.0	18.0	12.0	20.0	0.8
0.082	23.0	20.0	13.0	20.0	0.8
0.1	23.0	22.0	15.0	20.0	0.8

R.V.	1200 VDC				
Cap (μF)	W ±1.0	H ±1.0	T ±1.0	P	dØ ±0.05
0.001	18.0	10.0	5.0	15.0	0.8
0.0012	18.0	10.0	5.0	15.0	0.8
0.0015	18.0	10.0	5.0	15.0	0.8
0.0018	18.0	10.0	5.5	15.0	0.8
0.0022	18.0	10.5	5.5	15.0	0.8
0.0027	18.0	10.5	5.5	15.0	0.8
0.003	18.0	10.5	5.5	15.0	0.8
0.0033	18.0	10.5	5.5	15.0	0.8
0.0036	18.0	10.5	5.5	15.0	0.8
0.0039	18.0	10.5	5.5	15.0	0.8
0.0047	18.0	11.0	5.5	15.0	0.8
0.0056	18.0	11.5	6.0	15.0	0.8
0.0068	18.0	12.5	6.5	15.0	0.8
0.0082	18.0	13.0	7.5	15.0	0.8
0.01	18.0	14.0	8.0	15.0	0.8
0.012	18.0	14.5	9.0	15.0	0.8
0.015	18.0	15.5	10.0	15.0	0.8
0.018	18.0	17.0	11.0	15.0	0.8
0.022	18.0	18.0	12.5	15.0	0.8
0.027	23.0	17.5	10.0	20.0	0.8
0.033	23.0	18.5	11.0	20.0	0.8
0.036	23.0	19.0	11.5	20.0	0.8
0.039	23.0	19.5	12.0	20.0	0.8
0.043	23.0	20.0	13.0	20.0	0.8
0.047	23.0	20.5	13.5	20.0	0.8
0.056	23.0	22.0	15.0	20.0	0.8

特點 Feature :

- 低損耗、高脈沖

  Low Dissipation Factor、 high pulse strength

- 大電流耐受

  Excellent corona voltage

應用 Application :

- 電子照明

  Electronic lighting

- 開關電源電路

  Switching power supply circuits

- 諧振吸收運用

  Resonant absorption

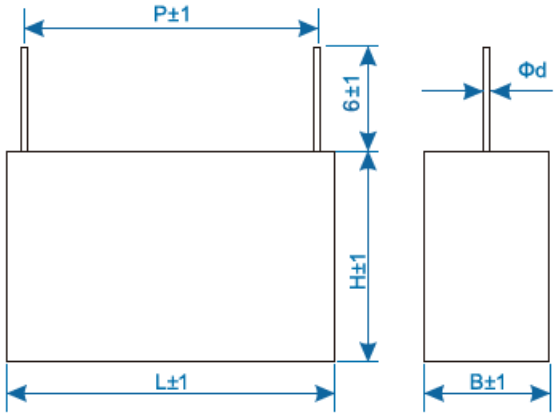

電氣特性 ELECTRICAL CHARACTERISTICS :

引用標準 Related Documents	IEC 61071
額定電壓 Rated Voltage	630VDC , 1000VDC , 1600VDC, 2000VDC
最大運行溫度 Maximum Operating Temperature	– 40°C ~ +105°C (+85°C to +105°C :Decreasing factor 1.25% per°C for Rated Voltage)
容量範圍 Capacitance Range	0.001μF ~ 2.2μF
容量誤差 Capacitance Tolerance	± 5% (J), ± 10% (K)
絕緣電阻 Insulation Resistance	Terminal to Terminal: (at 25°C ±5°C), Voltage charge time: 1 minute. Voltage: 100VDC ≥100000 Mohm (C≤0.33uf), ≥30000 Mohm*uF/C (C>0.33uf)
耐壓 Withstand Voltage	Terminal to Terminal: (at 20°C ±5°C) 1.5× UR (DC) applied for 10sec.
損耗角 Dissipation Factor	<=0.001(0.1%) at 1 KHz

R.V.	630VDC / 400VAC				
Cap (μF)	W ±1.0	H ±1.0	T ±1.0	P	dØ ±0.05
0.0033	13.0	9.0	4.0	10.0	0.6
0.0039	13.0	9.0	4.0	10.0	0.6
0.0047	13.0	9.0	4.0	10.0	0.6
0.0056	13.0	9.0	4.0	10.0	0.6
0.0068	13.0	9.0	4.0	10.0	0.6
0.0082	13.0	9.0	4.0	10.0	0.6
0.01	13.0	11.0	5.0	10.0	0.6
0.012	13.0	11.0	5.0	10.0	0.6
0.015	13.0	12.0	6.0	10.0	0.6
0.018	13.0	12.0	6.0	10.0	0.6
0.022	13.0	12.0	6.0	10.0	0.6
0.027	13.0	12.0	6.0	10.0	0.6
0.033	13.0	16.0	8.0	10.0	0.6
0.047	13.0	16.0	8.0	10.0	0.6
0.056	13.0	16.0	8.0	10.0	0.6
0.01	18.0	11.0	5.0	15.0	0.6
0.012	18.0	11.0	5.0	15.0	0.6
0.015	18.0	11.0	5.0	15.0	0.6
0.018	18.0	11.0	5.0	15.0	0.6
0.022	18.0	11.0	5.0	15.0	0.6
0.027	18.0	12.0	6.0	15.0	0.8
0.033	18.0	12.0	6.0	15.0	0.8
0.039	18.0	12.0	6.0	15.0	0.8
0.047	18.0	12.0	6.0	15.0	0.8
0.056	18.0	13.5	7.5	15.0	0.8
0.068	18.0	14.5	8.5	15.0	0.8
0.082	18.0	14.5	8.5	15.0	0.8
0.1	18.0	16.0	10.0	15.0	0.8
0.12	18.0	18.0	10.0	15.0	0.8
0.15	18.0	18.5	11.0	15.0	0.8

R.V.	630 VDC / 400 VAC				
Cap (μF)	W ±1.0	H ±1.0	T ±1.0	P	dØ ±0.05
0.18	18.0	21.0	12.0	15.0	0.8
0.047	26.5	15.0	6.0	22.5	0.8
0.056	26.5	15.0	6.0	22.5	0.8
0.068	26.5	15.0	6.0	22.5	0.8
0.082	26.5	15.0	6.0	22.5	0.8
0.1	26.5	15.0	6.0	22.5	0.8
0.12	26.5	16.5	7.0	22.5	0.8
0.15	26.0	17.0	8.5	22.5	0.8
0.18	26.0	17.0	8.5	22.5	0.8
0.22	26.5	19.0	10.0	22.5	0.8
0.27	26.5	19.0	10.0	22.5	0.8
0.33	26.0	20.0	11.0	22.5	0.8
0.39	26.0	21.5	12.0	22.5	0.8
0.47	26.5	23.0	13.0	22.5	0.8
0.56	26.0	25.0	15.0	22.5	0.8
0.15	32.0	18.0	9.0	27.5	0.8
0.18	32.0	18.0	9.0	27.5	0.8
0.22	32.0	18.0	9.0	27.5	0.8
0.27	32.0	18.0	9.0	27.5	0.8
0.33	31.4	19.5	10.8	27.5	0.8
0.39	31.4	19.5	10.8	27.5	0.8
0.47	31.5	21.6	13.0	27.5	0.8
0.56	31.5	21.6	13.0	27.5	0.8
0.68	31.0	25.0	14.0	27.5	0.8
0.82	32.0	28.0	18.0	27.5	0.8
1	31.0	33.0	18.0	27.5	0.8
1.2	31.0	33.0	18.0	27.5	0.8
1.5	32.0	37.0	22.0	27.5	0.8
1.8	32.0	37.0	22.0	27.5	0.8

R.V.	1000 VDC / 600 VAC				
Cap (μF)	W ±1.0	H ±1.0	T ±1.0	P	dØ ±0.05
0.00047	10.0	9.0	4.0	7.5	0.6
0.00056	10.0	9.0	4.0	7.5	0.6
0.00068	10.0	9.0	4.0	7.5	0.6
0.00082	10.0	9.0	4.0	7.5	0.6
0.001	10.0	9.0	4.0	7.5	0.6
0.0012	10.0	9.0	4.0	7.5	0.6
0.0015	10.0	11.0	5.0	7.5	0.6
0.0018	10.0	11.0	5.0	7.5	0.6
0.0022	10.0	11.0	5.0	7.5	0.6
0.0027	10.5	12.0	6.0	7.5	0.6
0.0033	10.5	12.0	6.0	7.5	0.6
0.00047	13.0	9.0	4.0	10.0	0.6
0.00056	13.0	9.0	4.0	10.0	0.6
0.00068	13.0	9.0	4.0	10.0	0.6
0.00082	13.0	9.0	4.0	10.0	0.6
0.001	13.0	9.0	4.0	10.0	0.6
0.0012	13.0	9.0	4.0	10.0	0.6
0.0015	13.0	9.0	4.0	10.0	0.6
0.0018	13.0	9.0	4.0	10.0	0.6
0.0022	13.0	9.0	4.0	10.0	0.6
0.0027	13.0	9.0	4.0	10.0	0.6
0.0033	13.0	9.0	4.0	10.0	0.6
0.0039	13.0	11.0	5.0	10.0	0.6
0.0047	13.0	11.0	5.0	10.0	0.6
0.0056	13.0	11.0	5.0	10.0	0.6
0.0068	13.0	11.0	5.0	10.0	0.6
0.0082	13.0	11.0	5.0	10.0	0.6
0.01	13.0	11.0	5.0	10.0	0.6
0.012	13.0	11.0	5.0	10.0	0.6
0.015	13.0	12.0	6.0	10.0	0.6

R.V.	1000 VDC / 600 VAC				
Cap (μF)	W ±1.0	H ±1.0	T ±1.0	P	dØ ±0.05
0.0082	18.0	11.0	5.0	15.0	0.6
0.01	18.0	11.0	5.0	15.0	0.8
0.012	18.0	11.0	5.0	15.0	0.8
0.015	18.0	11.0	5.0	15.0	0.8
0.018	18.0	11.0	5.0	15.0	0.8
0.022	18.0	11.0	5.0	15.0	0.8
0.027	18.0	12.0	6.0	15.0	0.8
0.033	18.0	12.0	6.0	15.0	0.8
0.039	18.0	13.5	7.5	15.0	0.8
0.047	18.0	13.5	7.5	15.0	0.8
0.056	18.0	13.5	7.5	15.0	0.8
0.068	18.0	14.5	8.5	15.0	0.8
0.082	18.0	14.5	8.5	15.0	0.8
0.1	18.0	16.0	10.0	15.0	0.8
0.12	18.0	18.0	10.0	15.0	0.8
0.027	26.5	15.0	6.0	22.5	0.8
0.033	26.5	15.0	6.0	22.5	0.8
0.039	26.5	15.0	6.0	22.5	0.8
0.047	26.5	15.0	6.0	22.5	0.8
0.056	26.5	15.0	6.0	22.5	0.8
0.068	26.5	16.5	7.0	22.5	0.8
0.082	26.0	17.0	8.5	22.5	0.8
0.1	26.0	17.0	8.5	22.5	0.8
0.12	26.0	17.0	8.5	22.5	0.8
0.15	26.5	19.0	10.0	22.5	0.8
0.18	26.0	20.0	11.0	22.5	0.8
0.22	26.0	20.0	11.0	22.5	0.8
0.27	26.5	23.0	13.0	22.5	0.8
0.33	26.0	25.0	15.0	22.5	0.8
0.39	26.0	25.0	15.0	22.5	0.8

R.V.	1000 VDC / 600 VAC				
Cap (μF)	W ±1.0	H ±1.0	T ±1.0	P	dØ ±0.05
0.1	32.0	18.0	9.0	27.5	0.8
0.12	32.0	18.0	9.0	27.5	0.8
0.15	31.4	19.5	10.8	27.5	0.8
0.18	31.4	19.5	10.8	27.5	0.8
0.22	31.5	21.6	13.0	27.5	0.8
0.27	31.5	21.6	13.0	27.5	0.8
0.33	31.0	25.0	14.0	27.5	0.8
0.33	31.4	19.5	10.8	27.5	0.8
0.39	32.0	28.0	18.0	27.5	0.8
0.47	32.0	28.0	18.0	27.5	0.8
0.56	32.0	37.0	22.0	27.5	0.8
0.68	32.0	37.0	22.0	27.5	0.8
0.68	32.0	28.0	18.0	27.5	0.8
1.8	41.5	45.0	30.0	37.5	1.0
2.2	41.5	45.0	30.0	37.5	1.0

R.V.	1600 VDC / 650 VAC				
Cap (μF)	W ±1.0	H ±1.0	T ±1.0	P	dØ ±0.05
0.0022	13.0	9.0	4.0	10.0	0.6
0.0033	13.0	9.0	4.0	10.0	0.6
0.0039	13.0	11.0	5.0	10.0	0.6
0.0047	13.0	11.0	5.0	10.0	0.6
0.0056	13.0	12.0	6.0	10.0	0.6
0.0068	13.0	12.0	6.0	10.0	0.6
0.0033	18.0	11.0	5.0	15.0	0.6
0.0039	18.0	11.0	5.0	15.0	0.6
0.0047	18.0	11.0	5.0	15.0	0.6
0.0056	18.0	11.0	5.0	15.0	0.6
0.0068	18.0	11.0	5.0	15.0	0.8
0.0082	18.0	11.0	5.0	15.0	0.6
0.01	18.0	12.0	6.0	15.0	0.8
0.012	18.0	12.0	6.0	15.0	0.8
0.015	18.0	12.0	6.0	15.0	0.8
0.018	18.0	13.5	7.5	15.0	0.8
0.022	18.0	13.5	7.5	15.0	0.8
0.027	18.0	13.5	7.5	15.0	0.8
0.033	18.0	14.5	8.5	15.0	0.8
0.039	18.0	17.0	8.5	15.0	0.8
0.047	18.0	17.0	8.5	15.0	0.8
0.056	18.0	18.0	10.0	15.0	0.8
0.022	26.5	15.0	6.0	22.5	0.8
0.027	26.5	15.0	6.0	22.5	0.8
0.033	26.5	15.0	6.0	22.5	0.8
0.039	26.5	15.0	6.0	22.5	0.8
0.047	26.5	16.5	7.0	22.5	0.8
0.056	26.0	17.0	8.5	22.5	0.8
0.068	26.0	17.0	8.5	22.5	0.8
0.082	26.0	15.8	10.0	22.5	0.8

R.V.	1600 VDC / 650 VAC				
Cap (μF)	W ±1.0	H ±1.0	T ±1.0	P	dØ ±0.05
0.1	26.0	20.0	11.0	22.5	0.8
0.12	26.0	20.0	11.0	22.5	0.8
0.15	26.5	23.0	13.0	22.5	0.8
0.22	26.0	25.0	15.0	22.5	0.8
0.047	32.0	18.0	9.0	27.5	0.8
0.056	32.0	18.0	9.0	27.5	0.8
0.068	32.0	18.0	9.0	27.5	0.8
0.082	32.0	18.0	9.0	27.5	0.8
0.1	32.0	20.0	11.0	27.5	0.8
0.12	32.0	20.0	11.0	27.5	0.8
0.15	31.5	21.6	13.0	27.5	0.8
0.18	31.0	25.0	14.0	27.5	0.8
0.22	31.0	25.0	14.0	27.5	0.8
0.27	32.0	28.0	18.0	27.5	0.8
0.33	32.0	28.0	18.0	27.5	0.8
0.1	42.0	22.0	12.0	37.5	1.0
0.12	42.0	22.0	12.0	37.5	1.0
0.18	41.0	24.0	13.0	37.5	1.0
0.22	41.0	24.0	13.0	37.5	1.0
0.27	41.0	24.0	13.0	37.5	1.0
0.33	42.0	25.0	14.0	37.5	1.0
0.39	41.0	28.5	16.0	37.5	1.0
0.47	41.0	28.5	16.0	37.5	1.0
0.56	41.5	34.0	20.5	37.5	1.0
0.68	41.5	34.0	20.5	37.5	1.0
0.82	42.0	39.5	20.0	37.5	1.0

R.V.	2000 VDC / 700 VAC				
Cap (μF)	W ±1.0	H ±1.0	T ±1.0	P	dØ ±0.05
0.00022	18.0	11.0	5.0	15.0	0.8
0.00027	18.0	11.0	5.0	15.0	0.6
0.00033	18.0	11.0	5.0	15.0	0.6
0.00039	18.0	11.0	5.0	15.0	0.6
0.00047	18.0	11.0	5.0	15.0	0.6
0.00056	18.0	11.0	5.0	15.0	0.6
0.00068	18.0	11.0	5.0	15.0	0.6
0.00082	18.0	11.0	5.0	15.0	0.6
0.001	18.0	11.0	5.0	15.0	0.6
0.0012	18.0	11.0	5.0	15.0	0.6
0.0015	18.0	11.0	5.0	15.0	0.6
0.0018	18.0	11.0	5.0	15.0	0.6
0.0022	18.0	11.0	5.0	15.0	0.6
0.0027	18.0	11.0	5.0	15.0	0.6
0.0033	18.0	11.0	5.0	15.0	0.6
0.0039	18.0	11.0	5.0	15.0	0.6
0.0047	18.0	11.0	5.0	15.0	0.8
0.0056	18.0	12.0	6.0	15.0	0.8
0.0068	18.0	12.0	6.0	15.0	0.8
0.0082	18.0	12.0	6.0	15.0	0.8
0.01	18.0	13.5	7.5	15.0	0.8
0.015	18.0	14.5	8.5	15.0	0.8
0.018	18.0	16.0	10.0	15.0	0.8
0.022	18.0	18.0	10.0	15.0	0.8
0.027	18.0	19.0	11.0	15.0	0.8
0.001	26.5	15.0	6.0	22.5	0.8
0.0012	26.5	15.0	6.0	22.5	0.8
0.0015	26.5	15.0	6.0	22.5	0.8
0.0018	26.5	15.0	6.0	22.5	0.8
0.0022	26.5	15.0	6.0	22.5	0.8

R.V.	2000 VDC / 700 VAC				
Cap (μF)	W ±1.0	H ±1.0	T ±1.0	P	dØ ±0.05
0.0027	26.5	15.0	6.0	22.5	0.8
0.0033	26.5	15.0	6.0	22.5	0.8
0.0039	26.5	15.0	6.0	22.5	0.8
0.0047	26.5	15.0	6.0	22.5	0.8
0.0056	26.5	15.0	6.0	22.5	0.8
0.0068	26.5	15.0	6.0	22.5	0.8
0.0082	26.5	15.0	6.0	22.5	0.8
0.01	26.5	15.0	6.0	22.5	0.8
0.012	26.5	15.0	6.0	22.5	0.8
0.015	26.5	15.0	6.0	22.5	0.8
0.018	26.5	15.0	6.0	22.5	0.8
0.022	26.5	16.5	7.0	22.5	0.8
0.027	26.5	16.5	7.0	22.5	0.8
0.033	26.0	17.0	8.5	22.5	0.8
0.039	26.0	17.0	8.5	22.5	0.8
0.056	26.0	20.0	11.0	22.5	0.8
0.068	26.0	21.5	12.0	22.5	0.8
0.082	26.5	23.0	13.0	22.5	0.8
0.1	26.0	25.0	15.0	22.5	0.8
0.033	32.0	18.0	9.0	27.5	0.8
0.039	32.0	18.0	9.0	27.5	0.8

R.V.	2000 VDC / 700 VAC				
Cap (μF)	W ±1.0	H ±1.0	T ±1.0	P	dØ ±0.05
0.047	32.0	20.0	11.0	27.5	0.8
0.056	32.0	20.0	11.0	27.5	0.8
0.068	31.0	22.0	13.0	27.5	0.8
0.1	31.0	25.0	14.0	27.5	0.8
0.12	31.0	25.0	14.0	27.5	0.8
0.15	32.0	28.0	18.0	27.5	0.8
0.18	32.0	28.0	18.0	27.5	0.8
0.22	32.0	37.0	22.0	27.5	0.8

特點 Feature :

- 高電壓、大電流

  High voltage, High current

- 低阻抗

  Low ESR

應用 Application :

- 光伏和風力逆變器

  Photovoltaic and wind inverters

- 變頻器、電動機驅動器

  Frequency converters、Motor drives

- 各式 IGBT 運用迴路

  All kinds of IGBT circuit

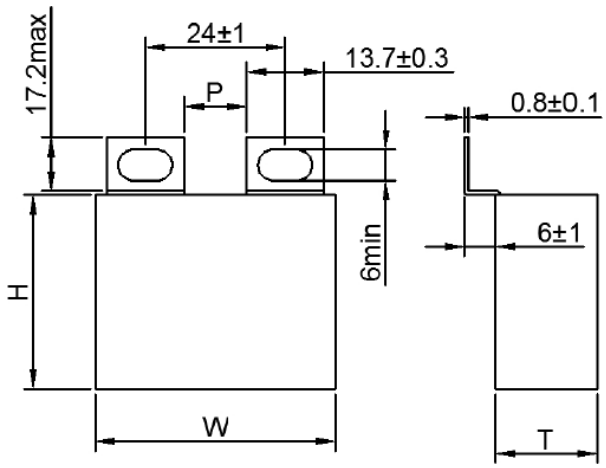

*各式端片可依客戶需求提供

All kinds of terminals can be provided according to customer requirements

電氣特性 ELECTRICAL CHARACTERISTICS :

引用標準 Related Documents	IEC 61071
額定電壓 Rated Voltage	850, 1000, 1200, 1600, 2000 VDC
最大運行溫度 Maximum Operating Temperature	– 40°C ~ +105°C (+85°C to +105°C :Decreasing factor 1.25% per°C for Rated Voltage)
容量範圍 Capacitance Range	0.1 μF ~ 6.5 μF
容量誤差 Capacitance Tolerance	± 5% (J), ± 10% (K)
絕緣電阻 Insulation Resistance	Terminal to Terminal: (at 20°C ±5°C), Voltage charge time: 1 minute. Voltage: 100VDC ≥100000 Mohm (C≤0.33uf), ≥30000 Mohm*uF/C (C>0.33uf)
耐壓 Withstand Voltage	Terminal to Terminal: (at 20°C ±5°C) 1.5× UR (DC) applied for 10sec.
損耗角 Dissipation Factor	<=0.001(0.1%) at 1 KHz

850 VDC									
Cap (μF)	R.V. (DC)	Dimensions (mm)				Terminal	dV/dt (V/uS)	Ipeak (A)	70℃ 100KHz ΔT≤15℃ Irms(A)
		W	H	T	P				
1.5	850	42.0	40.0	20.0	10.0	M6	750	1125	18.5
2.0	850	42.0	40.0	20.0	10.0	M6	750	1500	19.0
2.2	850	42.0	40.0	20.0	10.0	M6	750	1650	19.5
2.5	850	42.5	44.0	24.0	10.0	M6	750	1875	20.0
3	850	42.5	44.0	24.0	10.0	M6	750	2250	21.0
3.3	850	41.5	45.0	30.0	10.0	M6	750	2475	21.5
4.7	850	57.5	45.0	30.0	10.0	M6	450	2115	24.5
5	850	57.5	45.0	30.0	10.0	M6	450	2250	25.0
6.0	850	57.5	50.0	35.0	10.0	M6	450	2700	26.0
6.5	850	57.5	50.0	35.0	10.0	M6	450	2925	27.0

1000 VDC									
Cap (μF)	R.V. (DC)	Dimensions (mm)				Terminal	dV/dt (V/uS)	Ipeak (A)	70℃ 100KHz ΔT≤15℃ Irms(A)
		W	H	T	P				
1.2	1000	42.0	40.0	20.0	10.0	M6	850	1020	16.0
1.5	1000	42.5	44.0	24.0	10.0	M6	850	1275	16.0
2	1000	42.5	44.0	24.0	10.0	M6	850	1700	17.0
2.2	1000	42.5	44.0	24.0	10.0	M6	850	1870	20.0
2.5	1000	41.5	45.0	30.0	10.0	M6	850	2125	21.0
3	1000	41.5	45.0	30.0	10.0	M6	850	2550	21.5
3.3	1000	57.5	45.0	30.0	10.0	M6	500	1650	20.0
4.0	1000	57.5	45.0	30.0	10.0	M6	500	2000	21.0
4.7	1000	57.5	50.0	35.0	10.0	M6	500	2350	22.0
5	1000	57.5	50.0	35.0	10.0	M6	500	2500	23.0

1200 VDC									
Cap (μF)	R.V. (DC)	Dimensions (mm)				Terminal	dV/dt (V/uS)	Ipeak (A)	70°C 100KHz ΔT≤15°C Irms(A)
		W	H	T	P				
0.82	1200	42.0	40.0	20.0	10.0	M6	950	779	14.5
1	1200	42.0	40.0	20.0	10.0	M6	950	950	16.0
1.2	1200	42.5	44.0	24.0	10.0	M6	950	1140	19.0
1.5	1200	42.5	44.0	24.0	10.0	M6	950	1425	19.5
2.0	1200	41.5	45.0	30.0	10.0	M6	950	1900	20.0
2.2	1200	57.5	45.0	30.0	10.0	M6	600	1320	20.0
2.5	1200	57.5	45.0	30.0	10.0	M6	600	1500	21.0
3	1200	57.5	45.0	30.0	10.0	M6	600	1800	22.0
3.3	1200	57.5	50.0	35.0	10.0	M6	600	1980	23.0
4.0	1200	57.5	50.0	35.0	10.0	M6	600	2400	24.0

1600 VDC									
Cap (μF)	R.V. (DC)	Dimensions (mm)				Terminal	dV/dt (V/uS)	Ipeak (A)	70°C 100KHz ΔT≤15°C Irms(A)
		W	H	T	P				
0.68	1600	42.0	40.0	20.0	10.0	M6	1250	850	16.0
0.82	1600	42.5	44.0	24.0	10.0	M6	1250	1025	19.0
1	1600	41.5	45.0	30.0	10.0	M6	1250	1250	19.5
1.2	1600	41.5	45.0	30.0	10.0	M6	1250	1500	20.0
1.5	1600	57.5	45.0	30.0	10.0	M6	750	1125	22.0
2	1600	57.5	50.0	35.0	10.0	M6	750	1500	24.0

2000 VDC									
Cap (μF)	R.V. (DC)	Dimensions (mm)				Terminal	dV/dt (V/uS)	Ipeak (A)	70°C 100KHz ΔT≤15°C Irms(A)
		W	H	T	P				
0.47	2000	42.0	40.0	20.0	10.0	M6	1300	611.0	15.5
0.56	2000	42.5	44.0	24.0	10.0	M6	1300	728.0	18.0
0.68	2000	42.5	44.0	24.0	10.0	M6	1300	884.0	18.5
0.82	2000	41.5	45.0	30.0	10.0	M6	1300	1066.0	19.0
1	2000	57.5	45.0	30.0	10.0	M6	850	850.0	24.0
1.2	2000	57.5	45.0	30.0	10.0	M6	850	1020.0	23.0
1.5	2000	57.5	50.0	35.0	10.0	M6	850	1275.0	24.0

特點 Feature :

- 大容量對應

  Large volume correspondence

- 長壽命表現

  Long life performance

- 低阻抗性能

  Low impedance performance

應用 Application :

- 直流濾波應用

  DC filtering applications

- 變頻器& 光伏逆變器

  Frequency converters & PV Inverter

2–PINS Version

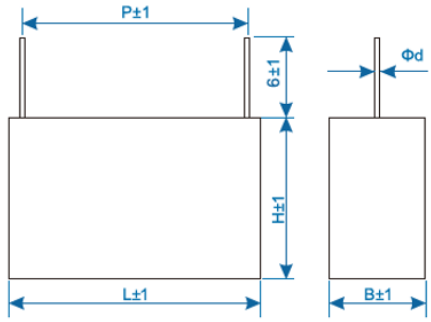

4–PINS Version

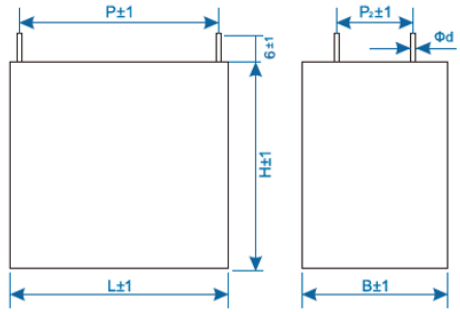

電氣特性 ELECTRICAL CHARACTERISTICS :

引用標準 Related Documents	IEC 61071/60068
額定電壓 Rated Voltage	700, 800, 900, 1100 VDC
最大運行溫度 Maximum Operating Temperature	– 40°C ~ + 105°C (+85°C to +105°Cdecreasing factor 1.35% per°C for Rated Voltage)
容量範圍 Capacitance Range	1 μF ~ 60 μF (大容量可訂製模組)
容量誤差 Capacitance Tolerance	± 5% (J), ± 10% (K)
絕緣電阻 Insulation Resistance	Terminal to Terminal: (at 20°C ±5°C), Voltage charge time: 1 minute. Voltage : 100VDC. ≥ 10000MΩ × μF
耐壓 Withstand Voltage	Terminal to Terminal: (at 20°C±5°C) 1.5 × VR applied for 10sec.
串聯電阻 Series resistance ESR	≤5.9mΩ (10KHz 20°C)

700 VDC												
Cap (μF)	V_{NDC}	Dimensions (mm) W	H	B	P(mm)	P1(mm)	dØ mm	I_{PEAK} A	ESR 10Khz mΩ	Irms 10Khz A	tanδ 1Khz %	tanδ 10Khz %
1.0	700	31.0	18.0	9.0	27.5	-	0.8	75	60.0	2.5	0.09	0.65
3.0	700	31.0	20.0	11.0	27.5	-	0.8	225	25.0	4.0	0.09	0.65
5.0	700	31.0	24.5	15.0	27.5	-	0.8	375	17.0	6.0	0.09	0.65
7.0	700	31.0	28.0	18.0	27.5	-	0.8	525	12.0	8.0	0.09	0.65
10.0	700	31.0	31.0	22.0	27.5	-	0.8	750	9.0	10.0	0.1	0.7
12.0	700	31.0	37.0	22.0	27.5	-	0.8	900	7.0	11.5	0.1	0.7
15.0	700	41.5	35.0	20.0	37.5	-	0.8/1.0	600	10.0	9.0	0.15	1.3
15.0	700	41.5	35.0	20.0	37.5	10.2	0.8/1.0	600	9.0	10.0	0.13	1.2
20.0	700	41.5	39.0	24.0	37.5	-	0.8/1.0	800	8.0	11.0	0.15	1.3
20.0	700	41.5	39.0	24.0	37.5	10.2	0.8/1.0	800	7.0	12.0	0.13	1.2
22.0	700	41.5	38.0	28.0	37.5	-	0.8/1.0	880	6.0	13.0	0.15	1.3
22.0	700	41.5	38.0	28.0	37.5	10.2	0.8/1.0	880	6.0	13.5	0.13	1.2
25.0	700	41.5	41.0	27.5	37.5	-	0.8/1.0	1000	6.0	13.5	0.15	1.3
25.0	700	41.5	41.0	27.5	37.5	10.2	0.8/1.0	1000	5.5	14.5	0.13	1.2
30.0	700	41.5	45.0	30.0	37.5	-	0.8/1.0	1200	5.0	16.0	0.15	1.3
30.0	700	41.5	45.0	30.0	37.5	20.3	0.8/1.0	1200	4.5	17.0	0.13	1.2
45.0	700	58.0	45.0	30.0	52.5	20.3	0.8/1.0	900	6.0	15.0	0.25	2.4
50.0	700	58.0	50.0	35.0	52.5	20.3	0.8/1.0	1000	5.5	15.5	0.25	2.4
55.0	700	58.0	50.0	35.0	52.5	20.3	0.8/1.0	1100	5.0	18.0	0.25	2.4
60.0	700	58.0	50.0	35.0	52.5	20.3	0.8/1.0	1200	5.0	19.0	0.25	2.4

800 VDC												
Cap (µF)	V_{NDC}	Dimensions (mm) W	H	B	P(mm)	P1(mm)	dØ (mm)	I_{PEAK} A	ESR 10Khz mΩ	Irms 10Khz A	tanδ 1Khz %	tanδ 10Khz %
1.0	800	31.0	18.0	9.0	27.5	-	0.8	80	65.0	2.0	0	0.6
2.0	800	31.0	20.0	11.0	27.5	-	0.8	160	35.0	3.5	0.1	0.6
3.0	800	31.0	22.0	13.0	27.5	-	0.8	240	25.0	4.5	0.1	0.6
4.0	800	31.0	24.5	15.0	27.5	-	0.8	320	17.0	5.5	0.1	0.6
5.0	800	31.0	28.0	18.0	27.5	-	0.8	400	14.0	7.0	0	0.6
6.0	800	31.0	28.0	18.0	27.5	-	0.8	480	11.0	7.5	0.1	0.65
7.0	800	31.0	33.0	18.0	27.5	-	0.8	560	10.0	9.0	0	0.65
8.0	800	31.0	31.0	22.0	27.5	-	0.8	640	9.0	9.5	0.1	0.65
9.0	800	31.0	37.0	22.0	27.5	-	0.8	720	8.5	10.0	0	0.65
10.0	800	41.5	35.0	20.0	37.5	-	0.8/1.0	450	14.0	8.0	0	1.2
10.0	800	41.5	35.0	20.0	37.5	10.2	0.8/1.0	450	13.0	8.5	0.1	1.1
12.0	800	41.5	35.5	22.5	37.5	-	0.8/1.0	540	11.0	8.5	0.1	1.2
12.0	800	41.5	35.5	22.5	37.5	10.2	0.8/1.0	540	10.0	9.0	0	1.1
15.0	800	41.5	39.0	24.0	37.5	-	0.8/1.0	675	9.0	10.0	0	1.2
15.0	800	41.5	39.0	24.0	37.5	10.2	0.8/1.0	675	8.0	11.0	0	1.1
20.0	800	41.5	41.0	27.5	37.5	-	0.8/1.0	900	7.0	13.0	0	1.2
20.0	800	41.5	41.0	27.5	37.5	10.2	0.8/1.0	900	6.0	13.5	0.1	1.1
22.0	800	41.5	45.0	30.0	37.5	-	0.8/1.0	990	6.0	14.5	0.1	1.2
22.0	800	41.5	45.0	30.0	37.5	20.3	0.8/1.0	990	5.5	15.5	0.1	1.1
25.0	800	41.5	45.0	32.0	37.5	-	0.8/1.0	1125	5.5	15.5	0.1	1.2
25.0	800	41.5	45.0	32.0	37.5	20.3	0.8/1.0	1125	5.0	16.0	0	1.1
30.0	800	58.0	45.0	30.0	52.5	20.3	0.8/1.0	750	8.0	12.0	0	2.2
35.0	800	58.0	45.0	30.0	52.5	20.3	0.8/1.0	875	7.0	14.5	0.2	2.2
40.0	800	58.0	50.0	35.0	52.5	20.3	0.8/1.0	1000	6.0	15.0	0	2.2
45.0	800	58.0	50.0	35.0	52.5	20.3	0.8/1.0	1125	5.5	17.0	0	2.2
50.0	800	58.0	53.0	38.0	52.5	20.3	0.8/1.0	1250	5.0	18.0	0	2.2

900 VDC												
Cap (µF)	V_{NDC}	Dimensions (mm) W	H	B	P(mm)	P1(mm)	dØ(mm)	I_{PEAK} A	ESR 10Khz mΩ	Irms 10Khz A	tanδ 1Khz %	tanδ 10Khz %
1.0	900	31.0	18.0	9.0	27.5	-	0.8	80	65.0	2.0	0.08	1.0
2.0	900	31.0	22.0	13.0	27.5	-	0.8	160	30.0	3.5	0.08	0.6
5.0	900	31.0	30.5	20.0	27.5	-	0.8	400	15.0	7.5	0.08	0.6
7.0	900	31.0	37.0	22.0	27.5	-	0.8	560	9.0	9.0	0.10	1.0
10.0	900	41.5	35.5	22.5	37.5	-	0.8/1.0	540	15.0	8.5	0.12	1.0
10.0	900	41.5	35.5	22.5	37.5	10.2	0.8/1.0	540	12.0	9.0	0.11	1.0
12.0	900	41.5	39.0	24.0	37.5	-	0.8/1.0	648	11.0	9.5	0.12	1.0
12.0	900	41.5	39.0	24.0	37.5	10.2	0.8/1.0	648	10.5	10.0	0.11	1.0
14.0	900	41.5	38.0	28.0	37.5	-	0.8/1.0	756	10.0	10.0	0.12	1.0
14.0	900	41.5	38.0	28.0	37.5	10.2	0.8/1.0	756	9.0	11.0	0.11	1.0
16.0	900	41.5	41.0	27.5	37.5	-	0.8/1.0	864	8.0	11.0	0.12	1.0
16.0	900	41.5	41.0	27.5	37.5	10.2	0.8/1.0	864	7.5	12.0	0.11	1.0
20.0	900	41.5	45.0	30.0	37.5	-	0.8/1.0	1080	6.0	14.0	0.12	1.0
20.0	900	41.5	45.0	30.0	37.5	20.3	0.8/1.0	1080	5.5	15.5	0.11	1.0
25.0	900	58.0	45.0	30.0	52.5	20.3	0.8/1.0	875	9.0	11.5	0.20	1.9
30.0	900	58.0	45.0	30.0	52.5	20.3	0.8/1.0	1050	8.0	13.0	0.20	2.0
35.0	900	58.0	50.0	35.0	52.5	20.3	0.8/1.0	1225	7.0	15.5	0.20	1.9
40.0	900	58.0	50.0	35.0	52.5	20.3	0.8/1.0	1400	6.0	17.0	0.20	2.0

1100 VDC												
Cap (μF)	V_{NDC}	Dimensions (mm) W	H	B	P(mm)	P1(mm)	dØ (mm)	I_{PEAK} A	ESR 10Khz mΩ	Irms 10Khz A	tanδ 1Khz %	tanδ 10Khz %
1.5	1100	31.0	22.0	13.0	27.5	-	0.8	150	25.0	4.0	0.08	0
3.0	1100	31.0	28.0	18.0	27.5	-	0.8	300	18.0	6.0	0.08	0
5.0	1100	31.0	37.0	22.0	27.5	-	0.8	500	10.0	9.0	0.08	0
8.0	1100	41.5	39.0	24.0	37.5	-	0.8/1.0	584	12.0	9.0	0.11	1.0
8.0	1100	41.5	39.0	24.0	37.5	10.2	0.8/1.0	584	11.0	9.5	0.10	0.8
10.0	1100	41.5	38.0	28.0	37.5	-	0.8/1.0	730	11.0	10.5	0.11	0.9
10.0	1100	41.5	38.0	28.0	37.5	10.2	0.8/1.0	730	10.0	11.0	0.10	1.0
12.0	1100	41.5	45.0	30.0	37.5	-	0.8/1.0	876	9.0	12.5	0.11	0.9
12.0	1100	41.5	45.0	30.0	37.5	20.3	0.8/1.0	876	8.0	13.5	0.10	0.8
14.0	1100	41.5	45.0	30.0	37.5	-	0.8/1.0	1022	8.0	13.5	0.11	0.9
14.0	1100	41.5	45.0	30.0	37.5	20.3	0.8/1.0	1022	7.0	14.5	0.10	0.8
15.0	1100	42.5	45.0	33.0	37.5	20.3	0.8/1.0	1095	6.5	15.0	0.11	1.0
20.0	1100	58.0	45.0	30.0	52.5	20.3	0.8/1.0	1000	10.0	12.5	0.17	1.6
25.0	1100	58.0	50.0	35.0	52.5	20.3	0.8/1.0	1250	8.0	15.0	0.17	2.0
27.0	1100	58.0	50.0	35.0	52.5	20.3	0.8/1.0	1350	7.0	16.0	0.17	2.0
30.0	1100	58.0	53.0	38.0	52.5	20.3	0.8/1.0	1500	6.0	16.5	0.17	1.6

特點 Feature :

- 完整安規選用

  Complete selection of safety regulations

- 有實驗室可進行驗証 EMI

  There are laboratories available to verify EMI

- 可客製生產

  Custom made products

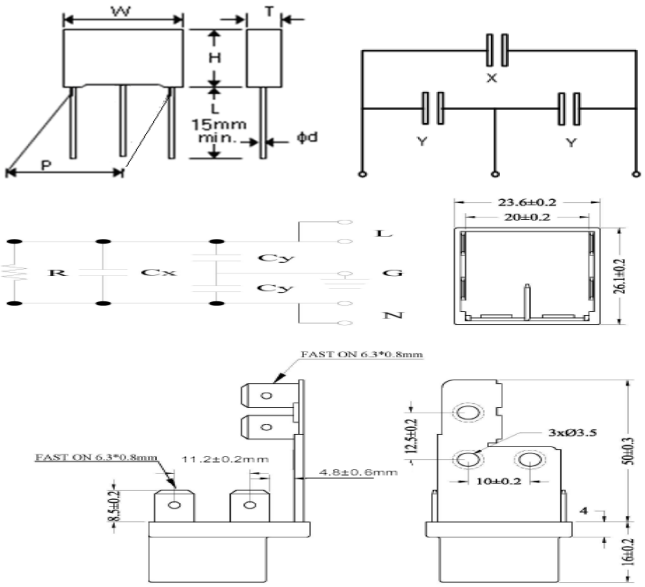

*可依客戶需求提供

Can be provided according to customer requirements

電氣特性 ELECTRICAL CHARACTERISTICS :

引用標準 Related Documents	IEC 60384-14
額定電壓 Rated Voltage	300,310,330,350,440,480 VAC(X1/X2), 300 VAC(Y2)
最大運行溫度 Maximum Operating Temperature	– 40°C ~ +110°C
容量範圍 Capacitance Range	0.01uF~0.1uF(X1/X2) / 0.001uF~0.068uF(Y2)
容量誤差 Capacitance Tolerance	± 5% (J), ± 10% (K)
絕緣電阻 Insulation Resistance	≥15,000 Mohm (C≤0.33uf), ≥5,000 Mohm*uF/C (C>0.33uf)
耐壓 Withstand Voltage	[Between Terminal] Nothing abnormal shall be found, Apply 4.3*Ur (DC) for 60 sec [Between Terminals &Enclosure] Nothing abnormal shall be found, Apply 2*Ur+1,500VAC for 2 to 5 sec. Min. 2,000VAC

R.V.	300/310/330/350 VAC(X1/X2) / 300 VAC(Y2)					
Cap (μF) X1/X2	Cap (μF) Y2	W ±1.0	H ±1.0	B ±1.0	P	dØ ±0.05
0.01	0.001	18.0	16.5	8.5	15.0	0.6
0.01~0.47	0.001~0.056	37.0~18.0	28.5~16.5	18.0~8.5	32.5~15.0	0.6~0.8
0.47	0.056	37.0	28.5	18.0	32.5	0.8
0.47~1.0	0.056~0.068	37.0	34.0~28.5	22.0~18.0	32.5	0.8
1.0	0.068	37.0	34.0	22.0	32.5	0.8

特點 Feature :

- 完整安規選用

  Complete selection of safety regulations

- 節點火花及高頻火花吸收能力強

  Strong absorption capacity of node spark and high frequency spark

- 可客製生產

  Custom made products

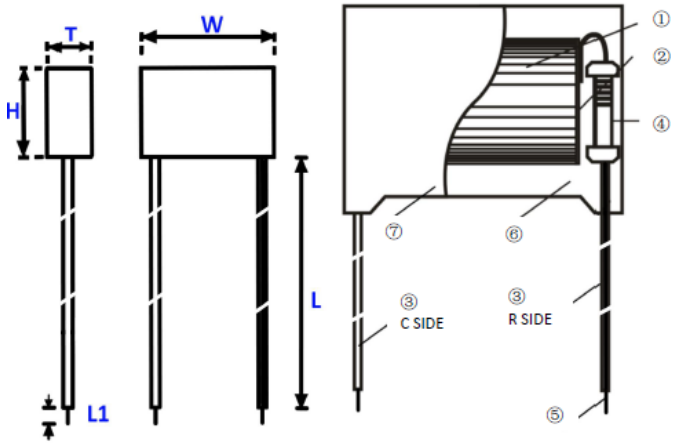

*可依客戶需求提供
Can be provided according to customer requirements

電氣特性 ELECTRICAL CHARACTERISTICS :

引用標準 Related Documents	IEC 60384-14
額定電壓 Rated Voltage	300,310,330,350,440,480 VAC(X1/X2)
最大運行溫度 Maximum Operating Temperature	– 40°C ~ +110°C
容量範圍 Capacitance Range	0.01uF~1.0uF(X1/X2) / 47Ω ~ 120Ω(RC)
容量誤差 Capacitance Tolerance	± 5% (J), ± 10% (K)
絕緣電阻 Insulation Resistance	IR ≥ 15000 MΩ AT 20 °C ,V=100 VDC, 60S
耐壓 Withstand Voltage	[Between Terminal] Nothing abnormal shall be found, Apply 4.3*Ur (DC) for 60 sec [Between Terminals &Enclosure] Nothing abnormal shall be found, Apply 2*Ur+1,500VAC for 2 to 5 sec. Min. 2,000VAC
損耗角 Dissipation Factor	≤ 175% AT F=1kHz AND 20℃

特點 Feature :

- 高電壓、大電流

  High voltage, High current

- 針對交流設計

  Design for AC voltage

應用 Application :

- 電源轉換器交流輸出濾波器

  AC output filter of power converters

- 變頻器、太陽能逆變器、UPS 不斷電

  Frequency converters、Solar inverters、

  UPS uninterruptible power

2–PINS Version

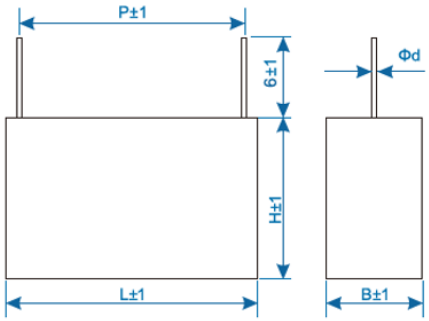

4–PINS Version

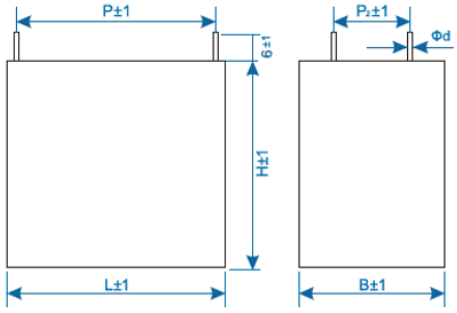

電氣特性 ELECTRICAL CHARACTERISTICS :

引用標準 Related Documents	UL810
額定電壓 Rated Voltage	250, 300, 350, 450, 480, 500VAC
最大運行溫度 Maximum Operating Temperature	– 40°C ~ +105°C (+85°C to +105°C :Decreasing factor 1.25% per °C for 250~350VAC) – 40°C ~ +105°C (+85°C to +105°C :Decreasing factor 1.55% per °C for 450~500VAC)
容量範圍 Capacitance Range	1.0 μF ~ 60.0 μF (大容量可訂製模組)
容量誤差 Capacitance Tolerance	± 5% (J), ± 10% (K)
絕緣電阻 Insulation Resistance	Terminal to Terminal: (at 20°C ±5°C), Voltage charge time: 1 minute. Voltage: 100VDC ≥30,000 Mohm (C≤0.33uf), ≥10,000 Mohm*uF/C (C>0.33uf)
耐壓 Withstand Voltage	Terminal to Terminal: (at 20°C ±5°C) 1.5 × VR applied for 10sec.
損耗角 Dissipation Factor	Less Than 0.1% (at 1KHz / 20°C)

250 VAC										
Cap (μF)	V_{NAC}	Dimensions (mm) W	H	B	P(mm)	P1 (mm)	dØ (mm)	I_{PEAK} A	ESR 10Khz mΩ	Irms 10Khz ▲A
2.0	250	31.0	18.0	9.0	27.5	-	0.8	100	45.0	3.0
2.5	250	31.0	20.0	10.0	27.5	-	0.8	125	35.0	3.5
3.3	250	31.0	20.5	12.0	27.5	-	0.8	165	25.0	5.0
5.0	250	31.0	24.5	15.0	27.5	-	0.8	250	14.0	8.0
8.0	250	31.0	33.0	18.0	27.5	-	0.8	400	10.0	9.0
10.0	250	31.0	37.0	22.0	27.5	-	0.8	500	9.0	11.0
12.0	250	31.0	37.0	22.0	27.5	-	0.8	300	7.0	12.0
15.0	250	41.5	35.5	22.5	37.5	10.2	0.8/1.0	375	9.0	14.0
15.0	250	41.5	35.5	22.5	37.5	-	0.8/1.0	375	10.0	13.0
16.0	250	41.5	35.5	22.5	37.5	10.2	0.8/1.0	400	8.0	14.0
16.0	250	41.5	35.5	22.5	37.5	-	0.8/1.0	400	9.0	13.0
20.0	250	41.5	38.0	28.0	37.5	10.2	0.8/1.0	500	6.0	16.0
20.0	250	41.5	38.0	28.0	37.5	-	0.8/1.0	500	7.0	15.0
30.0	250	41.5	45.0	30.0	37.5	20.3	0.8/1.0	360	5.0	19.0
30.0	250	41.5	45.0	30.0	37.5	-	0.8/1.0	360	5.5	18.0
40.0	250	58.0	45.0	30.0	52.5	20.3	0.8/1.0	480	5.0	23.0
50.0	250	58.0	50.0	35.0	52.5	20.3	0.8/1.0	600	5.0	26.0
60.0	250	58.0	50.0	35.0	52.5	20.3	0.8/1.0	720	5.0	29.0

300 VAC										
Cap (μF)	V_{NAC}	Dimensions (mm) W	H	B	P(mm)	P1(mm)	dØ (mm)	I_{PEAK} A	ESR 10Khz mΩ	Irms 10Khz ▲A
1.0	300	31.0	18.0	9.0	27.5	-	0.8	68	80.0	3.0
1.5	300	31.0	20.0	10.0	27.5	-	0.8	102	50.0	4.0
2.2	300	31.0	22.0	13.0	27.5	-	0.8	150	45.0	5.0
3.3	300	31.0	24.5	15.0	27.5	-	0.8	225	35.0	8.0
5.0	300	31.0	33.0	18.0	27.5	-	0.8	340	20.0	11.0
7.5	300	31.0	37.0	22.0	27.5	-	0.8	510	15.0	13.0
10.0	300	41.5	35.5	22.5	37.5	10.2	0.8/1.0	350	10.0	13.0
10.0	300	41.5	35.5	22.5	37.5	-	0.8/1.0	350	11.0	12.0
14.0	300	41.5	38.0	28.0	37.5	10.2	0.8/1.0	490	8.0	14.0
14.0	300	41.5	38.0	28.0	37.5	-	0.8/1.0	490	9.0	13.0
15.0	300	41.5	38.0	28.0	37.5	20.3	0.8/1.0	525	6.0	14.0
15.0	300	41.5	38.0	28.0	37.5	-	0.8/1.0	525	7.0	13.0
20.0	300	41.5	45.0	30.0	37.5	20.3	0.8/1.0	700	5.0	16.0
20.0	300	41.5	45.0	30.0	37.5	-	0.8/1.0	700	5.5	15.0
20.0	300	58.0	40.0	26.0	52.5	-	0.8/1.0	300	15.0	13.0
25.0	300	58.0	45.0	30.0	52.5	20.3	0.8/1.0	375	9.0	18.0
30.0	300	58.0	50.0	35.0	52.5	20.3	0.8/1.0	450	8.0	20.0
35.0	300	58.0	50.0	35.0	52.5	20.3	0.8/1.0	525	7.0	23.0
40.0	300	58.0	50.0	35.0	52.5	20.3	0.8/1.0	600	6.0	25.0

350 VAC										
Cap (μF)	V_{NAC}	Dimensions (mm) W	H	B	P(mm)	P1(mm)	dØ (mm)	I_{PEAK} A	ESR 10Khz mΩ	Irms 10Khz ▲A
1.0	350	31.0	20.0	10.0	27.5	-	0.8	100	45.0	3.0
1.5	350	31.0	23.5	14.0	27.5	-	0.8	150	28.0	4.5
2.2	350	31.0	24.5	15.0	27.5	-	0.8	200	21.0	6.5
3.5	350	31.0	33.0	18.0	27.5	-	0.8	300	13.0	10.0
5.0	350	31.0	37.0	22.0	27.5	-	0.8	500	10.0	13.0
7.5	350	41.5	35.5	22.5	37.5	10.2	0.8/1.0	375	10.0	12.0
7.5	350	41.5	35.5	22.5	37.5	-	0.8/1.0	375	10.5	11.0
10.0	350	41.5	38.0	28.0	37.5	10.2	0.8/1.0	500	9.0	14.0
10.0	350	41.5	38.0	28.0	37.5	-	0.8/1.0	500	10.0	13.0
13.0	350	41.5	45.0	30.0	37.5	20.3	0.8/1.0	650	6.0	16.0
13.0	350	41.5	45.0	30.0	37.5	-	0.8/1.0	650	7.0	15.0
15.0	350	41.5	45.0	32.0	37.5	20.3	0.8/1.0	750	7.0	16.0
18.0	350	58.0	45.0	30.0	52.5	20.3	0.8/1.0	900	6.0	17.0
20.0	350	58.0	45.0	30.0	52.5	20.3	0.8/1.0	700	6.0	18.0
25.0	350	58.0	50.0	35.0	52.5	20.3	0.8/1.0	875	5.0	21.0

425 VAC										
Cap (μF)	V_{NAC}	Dimensions (mm) W	H	B	P(mm)	P1(mm)	dØ (mm)	I_{PEAK} A	ESR 10Khz mΩ	Irms 10Khz ▲A
1.0	425	32.0	20.0	11.0	27.5	-	0.8	15.9	300	4.0
1.5	425	32.0	22.0	13.0	27.5	-	0.8	10.6	450	5.0
2.0	425	32.0	24.5	15.0	27.5	-	0.8	8.9	600	6.0
2.2	425	32.0	24.5	15.0	27.5	-	0.8	8.0	660	7.0
2.5	425	32.0	28.0	14.0	27.5	-	0.8	7.2	750	8.0
3.0	425	32.0	33.0	18.0	27.5	-	0.8	6.4	900	9.0
3.3	425	32.0	33.0	18.0	27.5	-	0.8	5.3	990	10.0
3.5	425	32.0	33.0	18.0	27.5	-	0.8	4.8	1050	10.0
4.0	425	32.0	33.0	18.0	27.5	-	0.8	4.6	1200	11.0
4.7	425	32.0	37.0	22.0	27.5	-	0.8	4.0	1410	13.0
5.0	425	32.0	37.0	22.0	27.5	-	0.8	3.4	1500	13.0
6.8	425	32.0	37.0	22.0	27.5	-	0.8	3.2	2040	14.0
4.7	425	41.0	32.0	17.0	37.5	----	0.8/1.0	6.4	987	9.0
5.0	425	41.0	33.5	18.5	37.5	----	0.8/1.0	6.0	1050	10.0
6.0	425	41.0	33.5	18.5	37.5	----	0.8/1.0	5.0	1260	11.0
6.8	425	41.0	37.0	22.0	37.5	----	0.8/1.0	4.4	1428	12.0
8.0	425	41.0	37.0	22.0	37.5	----	0.8/1.0	3.8	1680	13.0
10.0	425	41.0	41.0	26.0	37.5	----	0.8/1.0	3.0	2100	14.0
12.0	425	41.0	43.0	28.0	37.5	----	0.8/1.0	2.5	2520	14.0
15.0	425	42.0	45.0	30.0	37.5	----	0.8/1.0	2.1	3150	14.0
18.0	425	57.0	43.5	29.5	52.5	20.3	0.8/1.0	3.8	2160	17.0
20.0	425	57.0	43.5	29.5	52.5	20.3	0.8/1.0	3.4	2400	18.0
22.0	425	57.0	43.5	29.5	52.5	20.3	0.8/1.0	3.1	2640	20.0
25.0	425	57.0	50.0	35.0	52.5	20.3	0.8/1.0	2.7	3000	21.0
28.0	425	57.0	50.0	35.0	52.5	20.3	0.8/1.0	2.4	3360	23.0

480 VAC										
Cap (μF)	V_{NAC}	Dimensions (mm) W	H	B	P(mm)	P1(mm)	dØ (mm)	I_{PEAK} A	ESR 10Khz mΩ	Irms 10Khz ▲A
0.33	480	32.0	18.0	9.0	27.5	-	8.0	53.9	50	1.6
0.39	480	32.0	18.0	9.0	27.5	-	0.8	46.0	60	1.7
0.47	480	32.0	18.0	9.0	27.5	-	0.8	38.6	72	1.9
0.68	480	32.0	20.0	11.0	27.5	-	0.8	27.5	104	2.5
0.82	480	32.0	22.0	13.0	27.5	-	0.8	23.3	125	3.0
1.0	480	32.0	22.0	13.0	27.5	-	0.8	19.6	153	3.2
1.5	480	32.0	24.5	15.0	27.5	-	0.8	14.0	229	4.2
2.0	480	32.0	30.0	16.0	27.5	-	0.8	11.1	306	5.0
2.2	480	32.0	30.0	16.0	27.5	-	0.8	10.4	336	5.2
2.5	480	32.0	33.0	18.0	27.5	-	1.0	7.0	382	6.2
3.0	480	32.0	33.0	18.0	27.5	-	1.0	6.1	435	6.5
3.0	480	32.0	37.0	22.0	27.5	-	0.8	5.8	458	7.4
3.3	480	32.0	37.0	22.0	27.5	-	0.8	5.3	504	7.7
3.5	480	32.0	37.0	22.0	27.5	-	0.8	5.0	535	7.9
4.0	480	32.0	37.0	22.0	27.5	-	0.8	4.4	611	8.2
1.0	480	41.0	22.0	11.0	37.5	-	0.8/1.0	28.0	109	2.8
1.5	480	41.0	24.0	13.0	37.5	-	0.8/1.0	19.3	164	3.7
2.0	480	41.0	26.0	15.0	37.5	-	0.8/1.0	14.9	219	4.6
2.2	480	41.0	26.0	15.0	37.5	-	0.8/1.0	13.7	241	4.8
2.5	480	41.0	30.0	16.0	37.5	-	0.8/1.0	12.3	274	5.3
3.0	480	41.0	30.0	16.0	37.5	-	0.8/1.0	10.5	328	5.7
3.3	480	41.0	32.0	17.0	37.5	-	0.8/1.0	97.0	361	6.2
3.5	480	41.0	32.0	17.0	37.5	-	0.8/1.0	9.3	383	6.4
4.0	480	41.0	33.5	18.5	37.5	-	0.8/1.0	8.3	438	7.0
4.5	480	41.0	37.0	22.0	37.5	-	0.8/1.0	7.6	493	8.0
5.0	480	41.0	37.0	22.0	37.5	-	0.8/1.0	7.0	547	8.3
5.5	480	41.0	37.0	22.0	37.5	-	0.8/1.0	6.6	602	8.6
6.0	480	41.0	41.0	26.0	37.5	-	0.8/1.0	6.2	657	9.7
6.5	480	41.0	41.0	26.0	37.5	-	0.8/1.0	5.8	712	10.0

480 VAC										
Cap (μF)	V_{NAC}	Dimensions (mm) W	H	B	P(mm)	P1(mm)	dØ (mm)	I_{PEAK} A	ESR 10Khz mΩ	Irms 10Khz ▲A
7.0	480	41.0	41.0	26.0	37.5	-	0.8/1.0	5.5	766	10.3
7.5	480	41.0	41.0	26.0	37.5	-	0.8/1.0	5.3	821	10.5
8.0	480	41.0	41.0	26.0	37.5	-	0.8/1.0	5.1	876	10.5
8.5	480	41.0	43.0	28.0	37.5	-	0.8/1.0	4.9	930	10.5
9.0	480	41.0	43.0	28.0	37.5	-	0.8/1.0	4.7	985	10.5
9.5	480	42.0	45.0	30.0	37.5	-	0.8/1.0	4.5	1040	10.5
10.0	480	42.0	45.0	30.0	37.5	-	0.8/1.0	4.4	1095	10.5
10.0	480	57.0	45.0	25.0	52.5	-	0.8/1.0	5.7	781	11.6
11.0	480	57.0	45.0	25.0	52.5	-	0.8/1.0	5.3	859	11.9
12.0	480	57.0	43.5	29.5	52.5	20.3	0.8/1.0	4.4	937	14.1
15.0	480	57.0	45.0	35.0	52.5	20.3	0.8/1.0	3.7	1172	16.4
16.0	480	57.0	45.0	35.0	52.5	20.3	0.8/1.0	3.5	1250	16.8
18.0	480	57.0	50.0	35.0	52.5	20.3	0.8/1.0	3.2	1406	18.1
20.0	480	57.0	50.0	40.0	52.5	20.3	0.8/1.0	2.9	1562	19.8

特點 Feature :

- 高電壓、大電流

  High voltage, High current

- 針對交流設計

  Design for AC voltage

應用 Application :

- 電源轉換器交流輸出濾波器

  AC output filter of power converters

- 變頻器、太陽能逆變器、UPS 不斷電

  Frequency converters、Solar inverters、

  UPS uninterruptible power

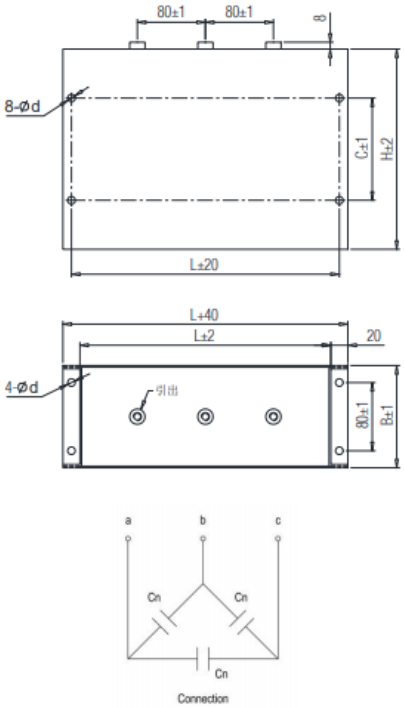

*外殼尺寸依客戶設計訂製

According to customer design

電氣特性 ELECTRICAL CHARACTERISTICS :

引用標準 Related Documents	IEC 61071
額定電壓 Rated Voltage	550~1000VAC
最大運行溫度 Maximum Operating Temperature	– 40°C ~ +85°C
容量範圍 Capacitance Range	3*20 ~ 3*225uF
容量誤差 Capacitance Tolerance	± 5% (J), ± 10% (K)
絕緣電阻 Insulation Resistance	(IR*Cn)30000s(not exceeding 30GΩ), 100VDC(20±5°C),1 minute
耐壓 Withstand Voltage	[Between Terminal] Nothing abnormal shall be found, 1.5Urms (AC) @50Hz, 10s, 20±5°C [Between Terminals & Enclosure] Nothing abnormal shall be found,(1.5Upeak+1000)VAC, the minimum 3000VAC (10s,50Hz)
損耗角 Dissipation Factor	≤$2.0*10^{-3}$ @100Hz, 20±5°C

容量(μF)	ESR@1.0KHz (mΩ)	Irms@45˚C @10KHz (A)
Urms 550VAC		
3x90	3x1.86	3x65
3x135	3x1.49	3x80
3x180	3x1.28	3x105
3x225	3x1.19	3x130
Urms 690VAC		
3x50	3x2.03	3x55
3x75	3x1.64	3x80
3x100	3x1.39	3x105
3x125	3x1.28	3x130
Urms 850VAC		
3x30	3x2.36	3x40
3x45	3x1.85	3x65
3x65	3x1.50	3x95
3x80	3x1.38	3x105
Urms 1000VAC		
3x20	3x2.68	3x30
3x30	3x2.07	3x55
3x45	3x1.63	3x65
3x55	3x1.43	3x95

應用 Application :

- 跨線、EMI 濾波器

  Across the line、EMI Filter

- 天線耦合

  Antenna coupling

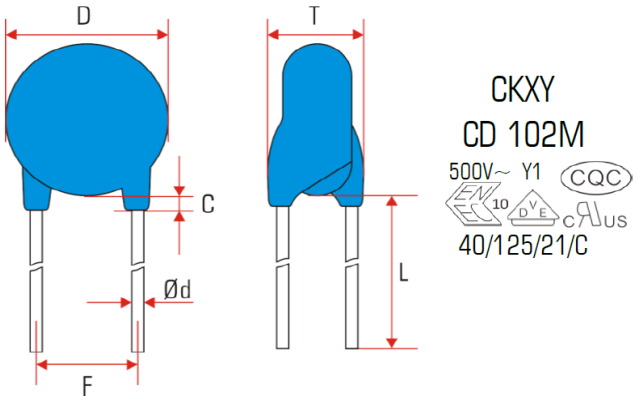

電氣特性 ELECTRICAL CHARACTERISTICS :

引用標準 Related Documents	IEC 60384 –14
國際認證 Approval Marks	UL/CL- E472525, ENEC- 40040706, CQC- CQC15001123983
額定電壓 Rated Voltage	250, 400, 500 VAC
最大運行溫度 Maximum Operating Temperature	-40°C ~ + 125°C
容量範圍 Capacitance Range	10 pF ~ 4700 pF
容量誤差 Capacitance Tolerance	± 5% (J), ± 10% (K), ± 20% (M)
絕緣電阻 Insulation Resistance	MΩ10 000MΩ minimum at 500VDC for 1 minute.
耐壓 Withstand Voltage	The capacitor should not be damaged when 4kVac(50Hz~60Hz, 50mA max) for 1 minute.
損耗角 Dissipation Factor	0.025 max

單位 : mm

Dielectric	C0G	SL	Y5P	X7R	Y5U	Y5V
容量範圍 Cap (pF)	(C)	(L)	B	(X)	(E)	(F)
1	8	8	8			
1.5	8	8	8			
2.2	8	8	8			
3.3	8	8	8			
4.7	10	10	9			
5.1	10	10	9	9		
6.8	11	11	10			
10	11	8	10	10		
12		8	10	10		
15		8	10	10		
18		8	10	10		
20		8	10	10		
22		8	10	10		
27		8	10	11		
30		8	10	11		
33		8	11	11		
36		8	11	11		
39		8	11	11		
47		12	11	11		
56		12	11	11		
68		12	11	11		
82		12	11	11		
100			11	11	8	
120			11	11	8	
150			11	11	8	
180			11	11	8	
220			11	11	8	
270			11	11	8	

單位 : mm

Dielectric	C0G	SL	Y5P	X7R	Y5U	Y5V
容量範圍 Cap (pF)	(C)	(L)	B	(X)	(E)	(F)
330			11	11	8	
390			11	11	8	
470			11	11	8	8
560			11	11	8	8
680			12	12	8	8
820			12	12	8	8
860			12	12	8	8
1000			15	15	9	9
1200			15	15	9	9
1500			16	16	11	11
1800			20	20	11	11
2000			20	20	12	12
2200			20	20	12	12
2700					14	14
2800					14	14
3000					16	16
3200					16	16
3300					16	16
3600					16	16
3900					19	19
4000					19	19
4700					19	19
5000					19	19
5500					22	22
5600					22	22
6000					22	22
6800					22	22
8000					22	22

單位 : mm

Dielectric	C0G	SL	Y5P	X7R	Y5U	Y5V
容量範圍 Cap (pF)	(C)	(L)	B	(X)	(E)	(F)
8200					25	25
8600					25	25
9000					25	25
10000					25	25
15000						

應用 Application :

- 跨線、EMI 濾波器

  Across the line、EMI Filter

- 天線耦合

  Antenna coupling

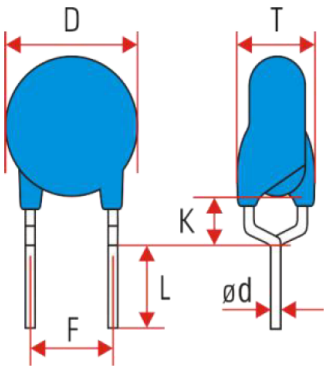

CKXY
CS 222M
300V~ Y2 CQC
40/125/21/C

電氣特性 ELECTRICAL CHARACTERISTICS :

引用標準 Related Documents	IEC 60384 –14
國際認證 Approval Marks	UL/CL- E472525, ENEC- 40045478, CQC- CQC17001162592
額定電壓 Rated Voltage	250, 300, 400, 440, 500 VAC
最大運行溫度 Maximum Operating Temperature	-40°C ~ + 125°C
容量範圍 Capacitance Range	10 pF ~ 10,000 pF
容量誤差 Capacitance Tolerance	± 5% (J), ± 10% (K), ± 20% (M)
絕緣電阻 Insulation Resistance	MΩ10 000MΩ minimum at 500VDC for 1 minute.
耐壓 Withstand Voltage	The capacitor should not be damaged when 2.5kVac(50Hz-60Hz, 50mA max) for 1 minute.
損耗角 Dissipation Factor	0.025 max

單位 : mm

Dielectric	C0G	SL	Y5P	X7R	Y5U	Y5V
容量範圍 Cap(pF)	(C)	(L)	B	(X)	(E)	(F)
1	8	8	8			
1.5	8	8	8			
2.2	8	8	8			
3.3	8	8	8			
4.7	8	8	8			
5.1	8	8	8	8		
6.8	10	10	9			
10	10	8	9	8		
12		8	9	8		
15		8	9	8		
18		8	9	8		
20		8	9	8		
22		8	9	8		
27		10	9	8		
30		10	9	8		
33		10	9	8		
36		10	9	8		
39		10	9	8		
47		11	9	8		
56		11	11	8		
68		11	11	8		
82		11	11	8		
100			8	8		
120			8	8		
150			8	8		
180			8	8		
220			8	8		
270			8	8		

單位 : mm

Dielectric	C0G	SL	Y5P	X7R	Y5U	Y5V
容量範圍 Cap(pF)	(C)	(L)	B	(X)	(E)	(F)
330			8	8	7	
390			10	9	7	
470			10	9	7	7
560			10	9	7	7
680			10	9	7	7
820			10	10	7	7
860			10	10	7	7
1000			12	10	8	8
1200			12	14	8	8
1500			15	14	9	9
1800			15		9	9
2000			16		10	10
2200			16		10	10
2700					12	12
2800					12	12
3000					12	12
3200					12	12
3300					12	12
3600					14	14
3900					14	14
4000					14	16
4700					16	16
5000					16	16
5500					16	16
5600					16	16
6000					19	19
6800					19	19
8000					19	19

單位 : mm

Dielectric	C0G	SL	Y5P	X7R	Y5U	Y5V
容量範圍 Cap(pF)	(C)	(L)	B	(X)	(E)	(F)
8200					19	20
8600					19	20
9000					25	25
10000					25	25
15000					28	25

■ Features

1.Low Losses
2.High Stability
3.High capacitor in small size and high dielectric strength voltage

■ Application

1.TV and monitors
2.High voltage power (ex、x-ray、lasers、apparatus、etc…)

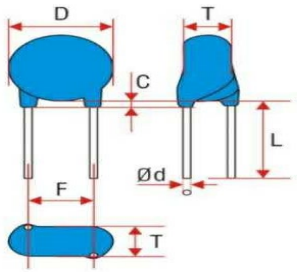

Specification

溫度 Temperature range	- 25 ˚C ~ + 85˚C
工作電壓 Working Voltage	10KV、15KV、20KV
測試電壓 Rated Voltage	1.5 times the rated voltage between two conductors,times 1S, charging and discharging current less than 50mA.
損失角 Dissipation Factor	Y5P 2.5% Max. at 1KHz

容量 Capatance	材質 texture of material	損失角 DF MAX at 1KHz	腳距 Pitch
100pF~3300pF	Y5P	2.50%	10、12.5
1000pF~4700pF	Y5U	3.50%	10、12.5
1000pF~10000pF	Y5V	5%	10、12.5

溫度特性 Temperature Characteristic		Y5P (B4)			N4700 (EL)		
額定電壓 Rated voltage		10KV (4A)	15KV (4N)	20KV (4D)	10KV (4A)	15KV (4N)	20KV (4D)
容量 Capacitance	100pF	9.0	9.00	9.5	9.0	9.0	
	150pF	9.0	9.50	11.0	9.5	10.0	
	220pF	10.0	10.50	12.5	10.5	11.5	
	330pF	11.5	12.00	14.0	12.0	13.0	
	470pF	13.0	14.00	16.0	13.5	14.5	
	680pF	15.0	16.00	18.5	16.0	17.0	
	1000pF	17.0	18.00	22.0	19.0	21.0	
	1500pF	20.0	22.00				
	2200pF	24.0	25.00				
尺寸 Dimensions(mm)	T (max)	7.0	8.50	11.0	7.0	8.5	10.5
	F	10.0±1.0	10.0±1.0 12.5±2.0	12.5±2.0	10.0±1.0	10.0±1.0 12.5±2.0	12.5±2.0
	L (mm)	26.0 32.0	26.0 32.0	26.0 32.0	26.0 32.0	26.0 32.0	26.0 32.0
	Φd (±0.05)	0.65	0.65 0.80	0.80	0.65	0.65 0.80	0.80
包封層 Coating	環氧樹脂 Epoxy resin						

UM SERIES. 4.0&3.0 MM HEIGHT
MOLDED SMD, LOW PROFILE, HIGH CV

- Operating with wide temperature range -55~+105°C
- High capacitance, Low-profile at 4.0mm and 3.0mm
- Compatibility with digitalization and high frequencies of electrical equipment with superior noise absorption.
- RoHS & REACH compliant, Halogen-free

SPECIFICATIONS

Items	Characteristics			
Operation Temp. Range	-55 ~ +105°C			
Rated Voltage Range	6.3~ 35V			
Capacitance Range	4.00mm height: 56 ~ 330μF / 3.00mm height: 47 ~ 220μF			
Capacitance Tolerance	±20% at 120Hz, 20°C			
Leakage Current (*1)	≤Specified value (Rated voltage applied for 2 minutes at 20°C)			
Dissipation Factor (tan δ)	0.12 max (at 20°C ,120Hz)			
ESR (*2)	≤Specified value at 100kHz, 20°C.			
Temperature Characteristics (Max. Imp. Ratio)	Measurement frequency: 100kHz			
	Impedance Ratio ZT/Z20 (max.)	Z(+105°C)/Z(20°C)	≤1.25	
		Z(-55°C)/Z(20°C)	≤1.25	
Damp Heat (Steady State)	The following specifications shall be satisfied when the capacitors are restored to 20°C after exposing them for 500hours at 60°C, 90 to 95% RH without voltage applied.			
	Capacitance Change	Within ±20% of initial measured value (*3)		
	Dissipation Factor	150% or less of initial specified value		
	ESR (*2)	150% or less of initial specified value		
	Leakage Current	Initial specified value or less		
Endurance	After 2000 hours application of the rated voltage at 105°C, the characteristics meet the requirements listed below.			
	Capacitance Change	Within ±20% of initial measured value (*3)		
	Dissipation Factor	150% or less of initial specified value		
	ESR (*2)	150% or less of initial specified value		
	Leakage Current	Initial specified value or less		

Resistance to Soldering Heat (Please refer approval data for soldering conditions)	After reflow soldering and restored to room temperature, the characteristics meet the requirements listed below.	
	Capacitance Change	Within ±10% of initial measured value (*3)
	Dissipation Factor	130% or less of initial specified value
	ESR (*2)	130% or less of initial specified value
	Leakage Current	Initial specified value or less
Marking	Laser print on the case top.	

(*1) If any doubt arises, measure the leakage current after the voltage treatment of applying DC rated voltage continuously to the capacitor for 120 minutes at 105°C.

(*2) Should be measured at both of the terminal ends closest where the terminals protrude through the molded case.

(*3) The cap. value before the test of resistance to soldering heat.

DRAWING (UNIT: MM)

Dimensions	D	W	t	A	B	C	E	F	G
6.5x6.5x4.0	6.5±0.1	6.5±0.1	4.0 Max.	4.88	0.40	2.60	1.30	2.30	1.90
6.5x6.5x3.0	6.5±0.1	6.5±0.1	3.0 Max.	4.88	0.40	2.60	1.30	2.30	1.90
5.0x5.0x3.0	5.0±0.1	5.0±0.1	3.0 Max.	3.38	0.40	1.85	1.30	1.75	1.50

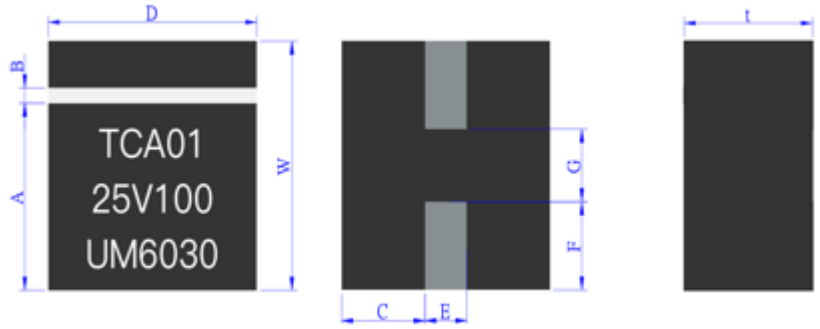

SURFACE MOUNT SOLID POLYMER ALUMINUM CAPACITORS

UM -55~+105°C 2,000 hours	Rated Capacitance	Case size L x W x H (mm)	ESR 100 kHz 20°C (mΩ)	RC 100 kHz 105°C (mA)	LC 20°C 2 Minutes (μA)	CKX Cap Part number
6.3	330	6.5 × 6.5×4.0	20	2400	415	CPUM0J331M656540TR
12	220	6.5 × 6.5×4.0	32	2100	528	CPUM1T221M656540TR
16	180	6.5 × 6.5×4.0	32	1900	576	CPUM1C181M656540TR
25	100	6.5 × 6.5×4.0	40	1900	350	CPUM1E101M656540TR
35	56	6.5 × 6.5×4.0	50	1100	392	CPUM1V560M656540TR

UM -55~+105°C 2,000 hours	Rated Capacitance	Case size L x W x H (mm)	ESR 100 kHz 20°C (mΩ)	RC 100 kHz 105°C (mA)	LC 20°C 2 Minutes (μA)	CKX Cap Part number
6.3	220	6.5 × 6.5×3.0	25	2000	277	CPUM0J221M656530TR
12	180	6.5 × 6.5×3.0	35	1600	432	CPUM1T181M656530TR
SPECIFICATIONS	150	6.5 × 6.5×3.0	35	1400	480	CPUM1C151M656530TR
25	100	6.5 × 6.5×3.0	50	1100	500	CPUM1E101M656530TR
35	47	6.5 × 6.5×3.0	55	1000	329	CPUM1V470M656530TR
16	68	5.0 × 5.0×3.0	65	950	217	CPUM1C680M505030TR
25	47	5.0 × 5.0×3.0	65	950	235	CPUM1E470M505030TR

PART NUMBERING SYSTEM

1	Company	CKX CAP	2	Type	Polymer Capacitor
	Code	C		Code	P

3		4		5	
Series	Code	Voltage (W.V.)	Code	Cap. (μf)	Code
UM	UM	6.3	0J	47	470
		7.5	0T	56	560
		10	1A	68	680
		12	1T	100	101
		16	1C	150	151
		25	1E	180	181
		30	1F	220	221
		35	1V	330	331

6		7		8	
Cap. Tol. (%)	Code	Size Code (mm) L x W x H	Code	Terminal	Code
±10	K	6.5 x 6.5 x 4.0	656540	Tape & Reel	TR
±20	M	6.5 x 6.5 x 3.0	656530		
-10~+30	Q	5.0 x 5.0 x 3.0	505030		
-10~+50	T				
Special	A				

■ Features

1. Wide operating voltage (V1mA) range from 18V to 820V.
2. Fast responding to transient over-voltage.
3. Large absorbing transient energy capability.
4.Low clamping ratio and no follow-on current.
5.Meets MSL level 1, per J-STD-020 ISO9001-2018.
6.Safety number : E317616 VDE-40028836 CQC-12001076478

■ Application

1.Transistor, Diode, IC, Thyristor or Triac semiconductor protection.
2.Surge protection in consumer electronics.
3.Surge protection in industrial electronics.
4.Surge protection in electronic home appliances, gas and petroleum appliances.
5.Relay and electromagnetic valve surge absorption.

■ General Characteristics Definition

Operating Temperature:	-40 ℃ ~+85 ℃ & -40 ℃ ~+125 ℃
Storage Temperature:	-40 oC ~ +125 oC
Working Surface Temperature:	+115 Oc
Insulation Resistance:	> 100M Ω
Coating (Epoxy Resin):	Flame-Retardant to UL 94 V-0

■ Dimensions

H	Y	X	W
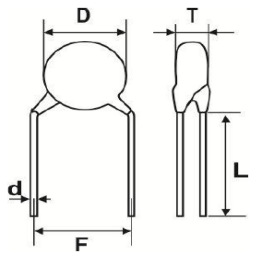	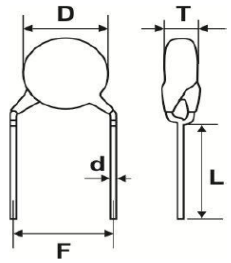	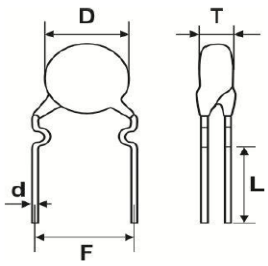	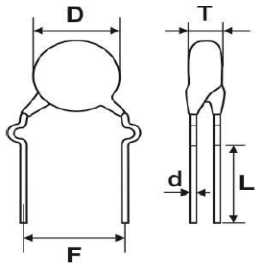

SIZE	電壓範圍 Rangeofvoltage(V)	尺寸Dimensions(mm)					
		D max	T max	F±0.8	d±0.05	H max	L min
05D	18-68V	6.5	2.5~4.8	5	0.6	9.5	15
	82-680V	6.5	26.~5.0	5	0.6	9.5	15
07D	18-68V	8.5	2.5~4.8	5	0.6	11.5	15
	82-820V	8.5	2.6~5.5	5	0.6	11.5	15
10D	18-68V	11.5	2.5~4.8	7.5	0.8	14.5	15
	82-1100V	11.8	2.6~9.7	7.5	0.8	14.5	15
14D	18-68V	15.5	2.5~4.8	7.5	0.8	18.5	15
	82-1800V	15.8	2.8~15	7.5	0.8	18.5	15
20D	18-68V	21.5	2.5~4.8	10	1.0	24.5	15
	82-1800V	21.8	2.5~15	10	1.0	24.5	15

05D Standard & High Surge

Part No.	Maximum Allowable Voltage		Energy 10/1000µS		Withstanding Surge Current 8/20µS				Rated Power	Varistor Voltage	Max Voltage	Capacitance
	ACrms	DC	Standard	High Surge	Standard (A)		High Surge(A)		(W)	AT 1mA	AT 5A	1KHz
	(V)	(V)	(J)	(J)	1 TIME	2 TIMES	1 TIME	2 TIMES		(V)	(V)	pF
05D180L	11	14	0.4	0.6	100	50	250	125	0.01	18(15-21)	38	1400
05D220K	14	18	0.6	0.7	100	50	250	125	0.01	22(20-24)	43	1150
05D270K	17	22	0.7	0.9	100	50	250	125	0.01	27(24-30)	53	930
05D330K	20	26	0.8	1.1	100	50	250	125	0.01	33(30-36)	65	760
05D390K	25	31	1.1	1.2	100	50	250	125	0.01	39(35-43)	77	640
05D470K	30	38	1.4	1.5	100	50	250	125	0.01	47(42-52)	93	530
05D560K	35	45	1.5	1.8	100	50	250	125	0.01	56(50-62)	110	450
05D680K	40	56	1.8	2.2	100	50	250	125	0.01	68(61-75)	135	370
Part No.	Maximum Allowable Voltage		Energy 10/1000µS		Withstanding Surge Current 8/20µS				Rated Power	Varistor Voltage	Max Voltage	Capacitance
	ACrms	DC	Standard	High Surge	Standard (A)		High Surge(A)		(W)	AT 1mA	AT 5A	1KHz
	(V)	(V)	(J)	(J)	1 TIME	2 TIMES	1 TIME	2 TIMES		(V)	(V)	pF
05D820K	50	65	2.6	3.8	400	200	800	600	0.1	82(74-90)	135	300
05D101K	60	85	2.8	4.0	400	200	800	600	0.1	100(90-110)	165	250
05D121K	75	100	4.2	5.0	400	200	800	600	0.1	120(108-132)	200	210
05D151K	95	125	4.2	7.0	400	200	800	600	0.1	150(135-165)	250	165
05D181K	115	150	5.6	8.0	400	200	800	600	0.1	180(162-198)	300	140
05D201K	130	170	7.7	8.7	400	200	800	600	0.1	200(180-220)	330	125
05D221K	140	180	8.8	9.0	400	200	800	600	0.1	220(198-242)	360	110
05D241K	150	200	9.8	11.0	400	200	800	600	0.1	240(216-264)	395	110
05D271K	175	225	10.5	13.0	400	200	800	600	0.1	270(243-297)	455	95
05D301K	190	250	11.8	14.0	400	200	800	600	0.1	300(270-330)	505	85
05D331K	210	275	14.0	14.5	400	200	800	600	0.1	330(297-363)	550	75
05D361K	230	300	14.0	16.0	400	200	800	600	0.1	360(324-396)	595	70
05D391K	250	320	15.4	17.0	400	200	800	600	0.1	390(351-429)	650	65
05D431K	275	350	16.8	20.0	400	200	800	600	0.1	430(387-473)	710	60
05D471K	300	385	18.2	20.8	400	200	800	600	0.1	470(423-517)	775	55
05D511K	320	415	19.6	21.0	400	200	800	600	0.1	510(459-561)	845	50
05D561K	350	460	19.6	23.0	400	200	800	600	0.1	560(504-616)	920	45
05D621K	385	505	21.0	25.0	400	200	800	600	0.1	620(558-682)	1025	40
05D681K	420	560	21.0	29.0	400	200	800	600	0.1	680(612-748)	1120	35
05D751K	460	615	22.4	32.0	400	200	800	600	0.1	750(675-825)	1240	30

07D Standard & High Surge

Part No.	Maximum Allowable Voltage		Energy 10/1000µS		Withstanding Surge Current 8/20µS				Rated Power	Varistor Voltage	Max Voltage	Capacitance
	ACrms	DC	Standard	High Surge	Standard (A)		High Surge(A)		(W)	AT 1mA	AT 5A	1KHz
	(V)	(V)	(J)	(J)	1 TIME	2 TIMES	1 TIME	2 TIMES		(V)	(V)	pF
07D180L	11	14	2.1	2.4	250	120	500	250	0.02	18(15-21)	38	1400
07D220K	14	18	2.4	2.8	250	120	500	250	0.02	22(20-24)	43	1150
07D270K	17	22	2.8	3.0	250	120	500	250	0.02	27(24-30)	53	930
07D330K	20	26	3.5	4	250	120	500	250	0.02	33(30-36)	65	760
07D390K	25	31	4.2	4.6	250	120	500	250	0.02	39(35-43)	77	640
07D470K	30	38	5.0	5.2	250	120	500	250	0.02	47(42-52)	93	530
07D560K	35	45	6.2	6.5	250	120	500	250	0.02	56(50-62)	110	450
07D680K	40	56	7.2	7.5	250	120	500	250	0.02	68(61-75)	135	370
Part No.	Maximum Allowable Voltage		Energy 10/1000µS		Withstanding Surge Current 8/20µS				Rated Power	Varistor Voltage	Max Voltage	Capacitance
	ACrms	DC	Standard	High Surge	Standard (A)		High Surge(A)		(W)	AT 1mA	AT 5A	1KHz
	(V)	(V)	(J)	(J)	1 TIME	2 TIMES	1 TIME	2 TIMES		(V)	(V)	pF
07D820K	50	65	9.8	10	1200	600	1750	1250	0.25	82(74-90)	135	600
07D101K	60	85	11.6	12.0	1200	600	1750	1250	0.25	100(90-110)	165	500
07D121K	75	100	14.0	14.2	1200	600	1750	1250	0.25	120(108-132)	200	420
07D151K	95	125	16.8	17.0	1200	600	1750	1250	0.25	150(135-165)	250	330
07D181K	115	150	18.2	22.0	1200	600	1750	1250	0.25	180(162-198)	300	280
07D201K	130	170	25.2	27.0	1200	600	1750	1250	0.25	200(180-220)	330	250
07D221K	140	180	26.5	29.0	1200	600	1750	1250	0.25	220(198-242)	360	230
07D241K	150	200	28.0	30.0	1200	600	1750	1250	0.25	240(216-264)	395	210
07D271K	175	225	32.2	33.0	1200	600	1750	1250	0.25	270(243-297)	455	185
07D301K	190	250	35.0	36.0	1200	600	1750	1250	0.25	300(270-330)	505	165
07D331K	210	275	37.8	38.0	1200	600	1750	1250	0.25	330(297-363)	550	150
07D361K	230	300	42.0	43.0	1200	600	1750	1250	0.25	360(324-396)	595	140
07D391K	250	320	46.2	47.0	1200	600	1750	1250	0.25	390(351-429)	650	130
07D431K	275	350	50.4	51.0	1200	600	1750	1250	0.25	430(387-473)	710	115
07D471K	300	385	56.0	57.0	1200	600	1750	1250	0.25	470(423-517)	775	105
07D511K	320	415	57.0	58.0	1200	600	1750	1250	0.25	510(459-561)	845	100
07D561K	350	460	58.0	61.0	1200	600	1750	1250	0.25	560(504-616)	920	90
07D621K	385	505	61.6	68.0	1200	600	1750	1250	0.25	620(558-682)	1025	80
07D681K	420	560	62.5	75.0	1200	600	1750	1250	0.25	680(612-748)	1120	75
07D751K	460	615	67.2	80.0	1200	600	1750	1250	0.25	750(675-825)	1240	65

10D Standard & High Surge

Part No.	Maximum Allowable Voltage		Energy 10/1000µS		Withstanding Surge Current 8/20µS				Rated Power	Varistor Voltage	Max Voltage	Capacitance
	ACrms	DC	Standard	High Surge	Standard (A)		High Surge(A)		(W)	AT 1mA	AT 5A	1KHz
	(V)	(V)	(J)	(J)	1 TIME	2 TIMES	1 TIME	2 TIMES		(V)	(V)	pF
10D180L	11	14	2.8	3.0	500	250	1000	500	0.05	18(15-21)	38	5600
10D220K	14	18	4.5	5.0	500	250	1000	500	0.05	22(20-24)	43	4500
10D270K	17	22	6.0	6.5	500	250	1000	500	0.05	27(24-30)	53	3700
10D330K	20	26	7.4	8.0	500	250	1000	500	0.05	33(30-36)	65	3000
10D390K	25	31	9.1	9.5	500	250	1000	500	0.05	39(35-43)	77	2600
10D470K	30	38	10.8	11	500	250	1000	500	0.05	47(42-52)	93	2100
10D560K	35	45	12.9	13	500	250	1000	500	0.05	56(50-62)	110	1800
10D680K	40	56	15.4	16	500	250	1000	500	0.05	68(61-75)	135	1500
Part No.	Maximum Allowable Voltage		Energy 10/1000µS		Withstanding Surge Current 8/20µS				Rated Power	Varistor Voltage	Max Voltage	Capacitance
	ACrms	DC	Standard	High Surge	Standard (A)		High Surge(A)		(W)	AT 1mA	AT 5A	1KHz
	(V)	(V)	(J)	(J)	1 TIME	2 TIMES	1 TIME	2 TIMES		(V)	(V)	pF
10D820K	50	65	16.8	17.0	2500	1250	3500	2500	0.4	82(74-90)	135	1200
10D101K	60	85	18.2	18.5	2500	1250	3500	2500	0.4	100(90-110)	165	1000
10D121K	75	100	21.0	21.5	2500	1250	3500	2500	0.4	120(108-132)	200	830
10D151K	95	125	25.2	26.0	2500	1250	3500	2500	0.4	150(135-165)	250	670
10D181K	115	150	30.8	38.0	2500	1250	3500	2500	0.4	180(162-198)	300	560
10D201K	130	170	42.0	42.5	2500	1250	3500	2500	0.4	200(180-220)	330	500
10D221K	140	180	46.2	46.5	2500	1250	3500	2500	0.4	220(198-242)	360	450
10D241K	150	200	50.4	51.0	2500	1250	3500	2500	0.4	240(216-264)	395	420
10D271K	175	225	57.4	58.0	2500	1250	3500	2500	0.4	270(243-297)	455	370
10D301K	190	250	63.0	63.5	2500	1250	3500	2500	0.4	300(270-330)	505	330
10D331K	210	275	68.6	69.0	2500	1250	3500	2500	0.4	330(297-363)	550	300
10D361K	230	300	74.2	75.0	2500	1250	3500	2500	0.4	360(324-396)	595	280
10D391K	250	320	81.2	82.0	2500	1250	3500	2500	0.4	390(351-429)	650	260
10D431K	275	350	88.2	89.0	2500	1250	3500	2500	0.4	430(387-473)	710	230
10D471K	300	385	96	100	2500	1250	3500	2500	0.4	470(423-517)	775	210
10D511K	320	415	98	102	2500	1250	3500	2500	0.4	510(459-561)	845	200
10D561K	350	460	100	104	2500	1250	3500	2500	0.4	560(504-616)	920	180
10D621K	385	505	102	106	2500	1250	3500	2500	0.4	620(558-682)	1025	160
10D681K	420	560	104	108	2500	1250	3500	2500	0.4	680(612-748)	1120	150
10D751K	460	615	110	118	2500	1250	3500	2500	0.4	750(675-825)	1240	140
10D781K	485	640	118	120	2500	1250	3500	2500	0.4	780(702-858)	1290	130
10D821K	510	670	122	125	2500	1250	3500	2500	0.4	820 (738-902)	1355	120
10D911K	550	745	128	134	2500	1250	3500	2500	0.4	910 (819-1001)	1500	110
10D102K	625	825	131	140	2500	1250	3500	2500	0.4	1000(900-1100)	1650	100
10D112K	680	895	133	155	2500	1250	3500	2500	0.4	1100(990-1210)	1815	90

14D Standard & High Surge

Part No.	Maximum Allowable Voltage		Energy 10/1000μS		Withstanding Surge Current 8/20μS				Rated Power	Varistor Voltage	Max Voltage	Capacitance
	ACrms	DC	Standard	High Surge	Standard (A)		High Surge(A)		(W)	AT 1mA	AT 5A	1KHz
	(V)	(V)	(J)	(J)	1 TIME	2 TIMES	1 TIME	2 TIMES		(V)	(V)	pF
14D180L	11	14	6.6	7.0	1000	500	2000	1000	0.1	18(15-21)	38	11100
14D220K	14	18	7.6	8.0	1000	500	2000	1000	0.1	22(20-24)	43	9100
14D270K	17	22	9.7	10.0	1000	500	2000	1000	0.1	27(24-30)	53	7400
14D330K	20	26	12.3	12.5	1000	500	2000	1000	0.1	33(30-36)	65	6100
14D390K	25	31	13.2	13.0	1000	500	2000	1000	0.1	39(35-43)	77	5100
14D470K	30	38	16.8	17.0	1000	500	2000	1000	0.1	47(42-52)	93	4300
14D560K	35	45	19.6	20	1000	500	2000	1000	0.1	56(50-62)	110	3600
14D680K	40	56	23.8	24	1000	500	2000	1000	0.1	68(61-75)	135	2900
Part No.	Maximum Allowable Voltage		Energy 10/1000μS		Withstanding Surge Current 8/20μS				Rated Power	Varistor Voltage	Max Voltage	Capacitance
	ACrms	DC	Standard	High Surge	Standard (A)		High Surge(A)		(W)	AT 1mA	AT 5A	1KHz
	(V)	(V)	(J)	(J)	1 TIME	2 TIMES	1 TIME	2 TIMES		(V)	(V)	pF
14D820K	50	65	29.4	30.0	4500	2500	6000	5000	0.6	82(74-90)	135	2400
14D101K	60	85	33.6	35.0	4500	2500	6000	5000	0.6	100(90-110)	165	2000
14D121K	75	100	40.6	42.0	4500	2500	6000	5000	0.6	120(108-132)	200	1700
14D151K	95	125	51.8	53.0	4500	2500	6000	5000	0.6	150(135-165)	250	1300
14D181K	115	150	58.8	74.0	4500	2500	6000	5000	0.6	180(162-198)	300	1100
14D201K	130	170	75.2	78.6	4500	2500	6000	5000	0.6	200(180-220)	330	1000
14D221K	140	180	79.8	80.5	4500	2500	6000	5000	0.6	220(198-242)	360	900
14D241K	150	200	82.6	86.0	4500	2500	6000	5000	0.6	240(216-264)	395	830
14D271K	175	225	84.0	94.0	4500	2500	6000	5000	0.6	270(243-297)	455	740
14D301K	190	250	103	105	4500	2500	6000	5000	0.6	300(270-330)	505	670
14D331K	210	275	112	115	4500	2500	6000	5000	0.6	330(297-363)	550	610
14D361K	230	300	123	130	4500	2500	6000	5000	0.6	360(324-396)	595	560
14D391K	250	320	135	140	4500	2500	6000	5000	0.6	390(351-429)	650	510
14D431K	275	350	145	155	4500	2500	6000	5000	0.6	430(387-473)	710	460
14D471K	300	385	147	175	4500	2500	6000	5000	0.6	470(423-517)	775	430
14D511K	320	415	148	180	4500	2500	6000	5000	0.6	510(459-561)	845	390
14D561K	350	460	150	186	4500	2500	6000	5000	0.6	560(504-616)	920	360
14D621K	385	505	155	188	4500	2500	6000	5000	0.6	620(558-682)	1025	320
14D681K	420	560	160	190	4500	2500	6000	5000	0.6	680(612-748)	1120	290
14D751K	460	615	180	210	4500	2500	6000	5000	0.6	750(675-825)	1240	270
14D781K	485	640	190	211	4500	2500	6000	5000	0.6	780(702-858)	1290	260
14D821K	510	670	203	235	4500	2500	6000	5000	0.6	820 (738-902)	1355	230
14D911K	550	745	208	255	4500	2500	6000	5000	0.6	910 (819-1001)	1500	220
14D102K	625	825	212	280	4500	2500	6000	5000	0.6	1000(900-1100)	1650	200
14D112K	680	895	217	310	4500	2500	6000	5000	0.6	1100(990-1210)	1815	180
14D152K	900	1200	266	420	4500	2500	6000	5000	0.6	1500(1350-1650)	2475	130
14D182K	1000	1465	336	510	4500	2500	6000	5000	0.6	1800(1620-1980)	2970	110

20D Standard & High Surge

Part No.	Maximum Allowable Voltage		Energy 10/1000μS		Withstanding Surge Current 8/20μS				Rated Power	Varistor Voltage	Max Voltage	Capacitance
	ACrms	DC	Standard	High Surge	Standard (A)		High Surge(A)		(W)	AT 1mA	AT 5A	1KHz
	(V)	(V)	(J)	(J)	1 TIME	2 TIMES	1 TIME	2 TIMES		(V)	(V)	pF
20D180L	11	14	6.1	13.0	2000	1000	3000	1000	0.2	18(15-21)	38	19000
20D220K	14	18	7.4	16.0	2000	1000	3000	1000	0.2	22(20-24)	43	15000
20D270K	17	22	9.1	19.0	2000	1000	3000	1000	0.2	27(24-30)	53	12000
20D330K	20	26	11.2	24.0	2000	1000	3000	1000	0.2	33(30-36)	65	10000
20D390K	25	31	13.2	28.0	2000	1000	3000	1000	0.2	39(35-43)	77	8500
20D470K	30	38	16.8	34.0	2000	1000	3000	1000	0.2	47(42-52)	93	7400
20D560K	35	45	19.6	41.0	2000	1000	3000	1000	0.2	56(50-62)	110	6500
20D680K	40	56	23.8	49.0	2000	1000	3000	1000	0.2	68(61-75)	135	5800
Part No.	Maximum Allowable Voltage		Energy 10/1000μS		Withstanding Surge Current 8/20μS				Rated Power	Varistor Voltage	Max Voltage	Capacitance
	ACrms	DC	Standard	High Surge	Standard (A)		High Surge(A)		(W)	AT 1mA	AT 5A	1KHz
	(V)	(V)	(J)	(J)	1 TIME	2 TIMES	1 TIME	2 TIMES		(V)	(V)	pF
20D820K	50	65	37.8	56.0	6500	4000	10000	7000	1.0	82(74-90)	135	4900
20D101K	60	85	42.0	70.0	6500	4000	10000	7000	1.0	100(90-110)	165	4000
20D121K	75	100	56.0	85.0	6500	4000	10000	7000	1.0	120(108-132)	200	3300
20D151K	95	125	70.0	106	6500	4000	10000	7000	1.0	150(135-165)	250	2700
20D181K	115	150	84.0	130	6500	4000	10000	7000	1.0	180(162-198)	300	2200
20D201K	130	170	98.0	140	6500	4000	10000	7000	1.0	200(180-220)	330	2000
20D221K	140	180	105	155	6500	4000	10000	7000	1.0	220(198-242)	360	1800
20D241K	150	200	112	168	6500	4000	10000	7000	1.0	240(216-264)	395	1650
20D271K	175	225	126	190	6500	4000	10000	7000	1.0	270(243-297)	455	1500
20D301K	190	250	133	210	6500	4000	10000	7000	1.0	300(270-330)	505	1300
20D331K	210	275	140	228	6500	4000	10000	7000	1.0	330(297-363)	550	1200
20D361K	230	300	168	255	6500	4000	10000	7000	1.0	360(324-396)	595	1100
20D391K	250	320	182	275	6500	4000	10000	7000	1.0	390(351-429)	650	1000
20D431K	275	350	196	305	6500	4000	10000	7000	1.0	430(387-473)	710	930
20D471K	300	385	202	350	6500	4000	10000	7000	1.0	470(423-517)	775	850
20D511K	320	415	207	360	6500	4000	10000	7000	1.0	510(459-561)	845	780
20D561K	350	460	210	366	6500	4000	10000	7000	1.0	560(504-616)	920	715
20D621K	385	505	224	372	6500	4000	10000	7000	1.0	620(558-682)	1025	650
20D681K	420	560	224	382	6500	4000	10000	7000	1.0	680(612-748)	1120	600
20D751K	460	615	230	410	6500	4000	10000	7000	1.0	750(675-825)	1240	530
20D781K	485	640	240	421	6500	4000	10000	7000	1.0	780(702-858)	1290	510
20D821K	510	670	250	460	6500	4000	10000	7000	1.0	820 (738-902)	1355	500
20D911K	550	745	260	510	6500	4000	10000	7000	1.0	910 (819-1001)	1500	440
20D102K	625	825	270	560	6500	4000	10000	7000	1.0	1000(900-1100)	1650	400
20D112K	680	895	280	620	6500	4000	10000	7000	1.0	1100(990-1210)	1815	360
20D152K	900	1200	420	780	6500	4000	10000	7000	1.0	1500(1350-1650)	2475	260
20D182K	1000	1465	560	860	6500	4000	10000	7000	1.0	1800(1620-1980)	2970	220

產品特性 Product characteristics

項目 Project		明細 Detail	測試方法 The test conditions
工作溫度範圍 Category temperature range		- 40℃~+85℃	
額定工作電壓 Rated operating voltage		5.5V DC	
高溫特性 High temperature characteristics	容量△C capacity	小於等於 30%初始值 Less than or equal to 30% of the initial value	置於上限工作溫度環境中 16h， 在此環境下測試。 Place in the higher operating temperature environment for 16h and test in this environment.
	ESR	小於等於初始值 Less than or equal to the initial value	
	外觀 appearance	無漏液或機械損傷 No leakage or mechanical damage	
低溫特性 low-temperature characteristics	容量△C capacity	小於等於 50%初始值 Less than or equal to 50% of the initial value	置於下限工作溫度環境中 2h，在此環境下測試。 Place in the lower operating temperature environment for 2h and test in this environment.
	ESR	小於等於初始值 7 倍 Less than or equal to 7 times the initial value	
	外觀 appearance	無漏液或機械損傷 No leakage or mechanical damage	
高溫耐久性 Endurance	容量△C capacity	小於等於 30%初始值 Less than or equal to 30% of the initial value	施加電壓Applied voltage： 5.0V 溫度Temperature： +85℃±2℃ 時間Time：1000h
	ESR	小於等於規定值 4 倍 Less than or equal to 4 times the specified value	
	外觀 appearance	無漏液或機械損傷 No leakage or mechanical damage	
迴圈壽命 Cycle life	容量△C capacity	小於等於 30%初始值 Less than or equal to 30% of the initial value	在 25℃下，用恒定電流使電容器在額定電壓和半額定電壓間迴圈充放電 500000 次。每次充放電之間擱置 5s。 Capacitors cycles 500000 times between rated voltage and half rated voltage under constant current at 25℃. Shelf for 5s between each charge and discharge.
	ESR	小於等於規定值 4 倍 Less than or equal to 4 times the specified value	
濕熱特性 Humidity Characteristics	容量△C capacity	小於等於 30%初始值 Less than or equal to 30% of the initial value	溫度Temperature： ＋40℃±2℃ 相對濕度Relative humidity： 90~95%RH 測試時間Test time： 240h
	ESR	小於等於初始值 4 倍 Less than or equal to 4 times the initial value	
	外觀 appearance	無漏液或機械損傷 No leakage or mechanical damage	

項目 Project		明細 Detail	測試方法 The test conditions
高低溫迴圈特性 Temperature cycle	容量△C capacity	小於等於 10%初始值 Less than or equal to10% of the initial value	溫度迴圈： - 40℃±2℃→常溫→ + 85℃±2℃→常溫 Temperature cycle： - 40℃±2℃ → normal temperature→ + 85℃± 2℃→ normal temperature 迴圈次數Cycles：5
	外觀 appearance	無機械損傷或漏液 No mechanical damage or leakage	
低溫存儲特性 Low temperature storage characteristics	容量△C capacity	小於等於 10%初始值 Less than or equal to10% of the initial value	施加電壓Applied voltage：0V 溫度Temperature：-40℃±2℃ 時間Time：96h
	ESR	小於等於初始值 2 倍 Less than or equal to 2 times the initial value	
	外觀 appearance	無漏液或機械損傷 No mechanical damage or leakage	
高溫存儲特性 High temperature storage characteristics	容量△C capacity	小於等於 10%初始值 Less than or equal to10% of the initial value	施加電壓Applied voltage：0V 溫度Temperature：+85℃±2℃ 時間Time：96h
	ESR	小於等於初始值 2 倍 Less than or equal to 2 times the initial value	
	外觀 appearance	無漏液或機械損傷 No mechanical damage or leakage	
自放電特性 Self discharge characteristics		自放電截止電壓大於等於額定電壓的 80% The self-discharge cut-off voltage is greater than or equal to 80% of the rated voltage	充電過程：常溫，無負載，額定電壓充電 8h Charging process: normal temperature, no load, rated voltage charge 8h 放置過程：溫度小於等於 25℃，相對濕度小於 60%RH，開路放置 24h Placement process: temperature less than or equal to 25 ℃ , relative humidity less than 60% RH, open 24 h
引出端強度 Lead strength		引出端無損壞 No damage to the outlet	DL/T 1652-2016
可焊性 Solder ability		超過 3/4 端子表面被錫層覆蓋 More than 3/4 of the terminal surface is covered by a tin layer	DL/T 1652-2016

標準產品外形尺寸圖 shape of standard product

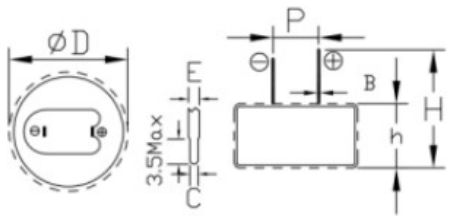

0.1～0.47F

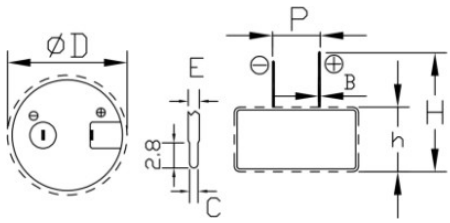

0.68～1.5F

實際尺寸及公差以參數表為准。

The actual size and tolerance shall be subject to the parameter table.

標準產品規定值及尺寸 Spec. value of standard product and dimensions

型號 Part Number	額定電壓 Rated Voltage (V)	額定電容 Rated Capacitance (F)	最大內阻 MAX ESR DC 25℃ (Ω)	漏電流 Leakage Current (25℃24h，mA)	測試電流 Test Current (mA)	產品尺寸 Size/ mm					
						D±0.5	P±0.5	C±0.1	H±1.0	B±0.1	h±0.5
FH5R5C104TH-L0	5.5	0.1	50	0.003	1	13.2	5	0.8	13	0.4	7
FH5R5C224TH-L0	5.5	0.22	50	0.003	3.3	13.2	5	0.8	13	0.4	7
FH5R5C334TH-L0	5.5	0.33	50	0.004	3.3	13.2	5	0.8	13	0.4	7
FH5R5C474TH-L0	5.5	0.47	50	0.004	4.7	13.2	5	0.8	13	0.4	7
FH5R5C684TH-L0	5.5	0.68	30	0.006	6.8	21	5	0.8	12.5	0.5	7.5
FH5R5C105TH-L0	5.5	1	15	0.006	10	21	5	0.8	12.5	0.5	7.5
FH5R5C155TH-L0	5.5	1.5	15	0.01	15	21	5	0.8	12.5	0.5	7.5

包裝規格 Packing Specification

型號 Part Number	數量 Quantity (PCS)			尺寸 Dimension (L×W×H)mm	
	塑膠託盤 Plastic tray	內箱 Inner	外箱 Outer	內箱 Inner	外箱 Outer
FH5R5C104TH-L0	117/168	819/1176	3276/4704	280*200*120	300*420*260
FH5R5C224TH-L0	117/168	819/1176	3276/4704	280*200*120	300*420*260
FH5R5C334TH-L0	117/168	819/1176	3276/4704	280*200*120	300*420*260
FH5R5C474TH-L0	117/168	819/1176	3276/4704	280*200*120	300*420*260
FH5R5C684TH-L0	70	490	1960	280*200*120	300*420*260
FH5R5C105TH-L0	70	490	1960	280*200*120	300*420*260
FH5R5C155TH-L0	70	490	1960	280*200*120	300*420*260

備註：當包裝數量小於外箱可容納的產品數量時，將根據數量採用合適的包裝外箱。

Note: when the packing quantity is less than the product quantity that can be contained in the outer box, the appropriate packing box will be adopted according to the quantity.

包裝規格可按需求更改，下單前請與我司聯繫確定。

Packaging specifications can be changed as needed, please contact us before you place your order.

產品特性 Product characteristics

項目 Project		明細 Detail	測試方法 The test conditions
工作溫度範圍 Category temperature range		- 40℃~+85℃	
額定工作電壓 Rated operating voltage		5.5V DC	
高溫特性 High temperature characteristics	容量△C capacity	小於等於 30%初始值 Less than or equal to 30% of the initial value	置於上限工作溫度環境中 16h， 在此環境下測試。 Place in the higher operating temperature environment for 16h and test in this environment.
	ESR	小於等於初始值 Less than or equal to the initial value	
	外觀 appearance	無漏液或機械損傷 No leakage or mechanical damage	
低溫特性 low-temperature characteristics	容量△C capacity	小於等於 50%初始值 Less than or equal to 50% of the initial value	置於下限工作溫度環境中 2h，在此環境下測試。 Place in the lower operating temperature environment for 2h and test in this environment.
	ESR	小於等於初始值 7 倍 Less than or equal to 7 times the initial value	
	外觀 appearance	無漏液或機械損傷 No leakage or mechanical damage	
高溫耐久性 Endurance	容量△C capacity	小於等於 30%初始值 Less than or equal to 30% of the initial value	施加電壓 Applied voltage：5.0V 溫度Temperature：+85℃±2℃ 時間 Time：1000h
	ESR	小於等於規定值 4 倍 Less than or equal to 4 times the specified value	
	外觀 appearance	無漏液或機械損傷 No leakage or mechanical damage	
迴圈壽命 Cycle life	容量△C capacity	小於等於 30%初始值 Less than or equal to 30% of the initial value	在 25℃下，用恒定電流使電容器在額定電壓和半額定電壓間迴圈充放電 500000 次。每次充放電之間擱置 5s。 Capacitors cycles 500000 times between rated voltage and half rated voltage under constant current at 25 ℃ . Shelf for 5s between each charge and discharge.
	ESR	小於等於規定值 4 倍 Less than or equal to 4 times the specified value	
濕熱特性 Humidity Characteristics	容量△C capacity	小於等於 30%初始值 Less than or equal to 30% of the initial value	溫度Temperature：+ 40℃±2℃ 相對濕度 Relative humidity ：90~95%RH 測試時間Test time： 240h
	ESR	小於等於初始值 4 倍 Less than or equal to 4 times the initial value	
	外觀 appearance	無漏液或機械損傷 No leakage or mechanical damage	

項目 Project		明細 Detail	測試方法 The test conditions
高低溫迴圈特性 Temperature cycle	容量△C capacity	小於等於 10%初始值 Less than or equal to10% of the initial value	溫度迴圈：－40℃±2℃→常溫→＋85℃±2℃→常溫 Temperature cycle：－40℃±2℃→ normal temperature→＋85℃±2℃→ normal temperature 迴圈次數Cycles：5
	外觀 appearance	無機械損傷或漏液 No mechanical damage or leakage	
低溫存儲特性 Low temperature storage characteristics	容量△C capacity	小於等於 10%初始值 Less than or equal to10% of the initial value	施加電壓 Applied voltage：0V 溫度Temperature：-40℃±2℃ 時間 Time：96h
	ESR	小於等於初始值 2 倍 Less than or equal to 2 times the initial value	
	外觀 appearance	無漏液或機械損傷 No mechanical damage or leakage	
高溫存儲特性 High temperature storage characteristics	容量△C capacity	小於等於 10%初始值 Less than or equal to10% of the initial value	施加電壓 Applied voltage：0V 溫度Temperature：+85℃±2℃ 時間 Time：96h
	ESR	小於等於初始值 2 倍 Less than or equal to 2 times the initial value	
	外觀 appearance	無漏液或機械損傷 No mechanical damage or leakage	
自放電特性 Self discharge characteristics		自放電截止電壓大於等於額定電壓的 80% The self-discharge cut-off voltage is greater than or equal to 80% of the rated voltage	充電過程：常溫，無負載，額定電壓充電 8h Charging process: normal temperature, no load, rated voltage charge 8h 放置過程：溫度小於等於 25℃，相對濕度小於 60%RH，開路放置 24h Placement process: temperature less than or equal to 25 ℃, relative humidity less than 60% RH, open 24 h
引出端強度 Lead strength		引出端無損壞 No damage to the outlet	DL/T 1652-2016
可焊性 Solder ability		超過 3/4 端子表面被錫層覆蓋 More than 3/4 of the terminal surface is covered by a tin layer	DL/T 1652-2016

標準產品外形尺寸圖 shape of standard product

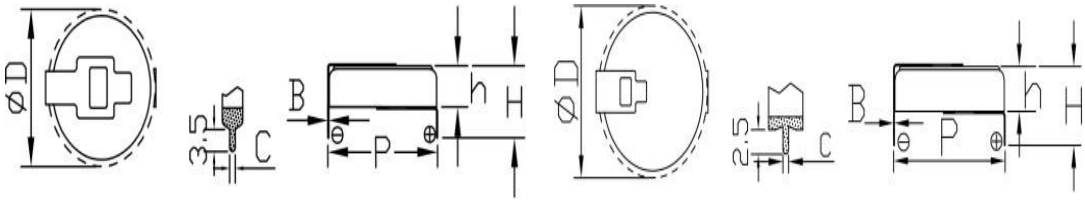

0.1～0.47F　　0.68～2.0F

實際尺寸及公差以參數表為准。

The actual size and tolerance shall be subject to the parameter table.

標準產品規定值及尺寸 Spec. value of standard product and dimensions

型號 Part Number	額定電壓 Rated Voltage (V)	額定電容 Rated Capacitance (F)	最大內阻 MAX ESR DC 25℃ (Ω)	漏電流 Leakage Current (25℃24h，mA)	測試電流 Test Current (mA)	產品尺寸 Size/ mm					
						D±0.5	P±0.5	C±0.1	H±1.0	B±0.1	h±0.5
FH5R5H104TH-L0	5.5	0.1	50	0.003	1	12	10	0.8	10	0.20	4.8
FH5R5H224TH-L0	5.5	0.22	50	0.003	2.2	12	10	0.8	10	0.20	4.8
FH5R5H334TH-L0	5.5	0.33	50	0.004	3.3	12	10	0.8	10	0.20	4.8
FH5R5H474TH-L0	5.5	0.47	50	0.004	4.7	12	10	0.8	10	0.20	4.8
FH5R5H684TH-L0	5.5	0.68	30	0.006	6.8	19.2	19.5	1	9.5	0.20	4.8
FH5R5H105TH-L0	5.5	1.0	15	0.006	10	19.2	19.5	1	9.5	0.20	4.8
FH5R5H155TH-L0	5.5	1.5	15	0.010	15	19.2	19.5	1	9.5	0.20	4.8

包裝規格 Packing Specification

產品規格 Product specifications	數量 Quantity (PCS)			尺寸 Dimension (L×W×H)mm	
	塑膠託盤 Plastic tray	內箱 Inner	外箱 Outer	內箱 Inner	外箱 Outer
0.1-0.47F	168	1680	6720	280*200*120	300*420*260
1.0-2.0F	70/80	560/720	2240/2880	280*200*120	300*420*260

備註：當包裝數量小於外箱可容納的產品數量時，將根據數量採用合適的包裝外箱。

Note: when the packing quantity is less than the product quantity that can be contained in the outer box, the appropriate packing box will be adopted according to the quantity.

包裝規格可按需求更改，下單前請與我司聯繫確定。

Packaging specifications can be changed as needed, please contact us before you place your order.